2590562-J EN 2601

Omega
SERIES

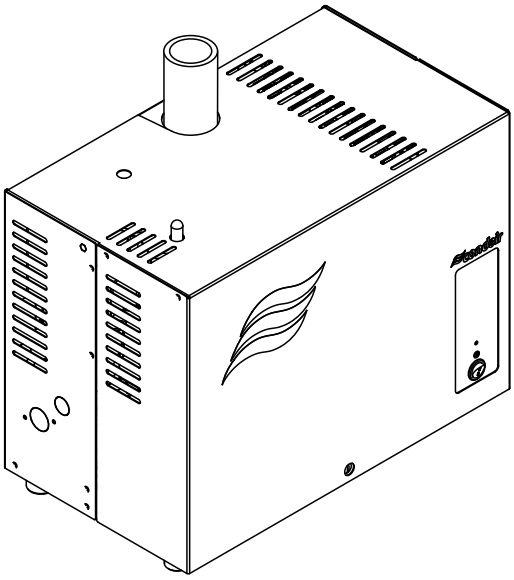

OPERATION MANUAL

Steam generator
Condair **Omega**

Humidification, Dehumidification
and Evaporative Cooling

condair

Thank you for choosing Condair

Installation date (MM/DD/YYYY):
Commissioning date (MM/DD/YYYY):
Site:
Model:
Serial number:

Proprietary Notice

This document and the information disclosed herein are proprietary data of Condair Group AG. Neither this document, nor the information contained herein shall be reproduced, used, or disclosed to others without the written authorisation of Condair Group AG, except to the extent required for installation or maintenance of recipient's equipment.

Liability Notice

Condair Group AG does not accept any liability due to incorrect installation or operation of the equipment or due to the use of parts/components/equipment that are not authorised by Condair Group AG.

Copyright Notice

© Condair Group AG, All rights reserved.

Technical modifications reserved

Contents

1	**Introduction**	**5**
1.1	To the very beginning	5
1.2	Notes on the operation manual	5
2	**For your safety**	**7**
3	**Product Overview**	**9**
3.1	Models overview	9
3.2	Identification of the unit	10
3.3	Construction of the Condair Omega steam generator	11
3.4	Functional description	12
3.5	System overview Condair Omega	13
4	**Operation**	**14**
4.1	First-time commissioning	14
4.2	Display and operating elements	15
4.3	Commissioning after an interruption of operation	16
4.4	Notes on operation	17
4.5	Inspections during operation	17
4.6	Taking the unit out of operation	18
5	**Working with the SPA Display**	**19**
5.1	Home screens	19
5.1.1	Home screens "Steam shower application"	19
5.1.1.1	Home screen with activated "Temperature control"	19
5.1.1.2	Homescreen with operation with "constant steam production"	20
5.1.1.3	Home screen with operation with "external control"	21
5.1.2	Home screen "Steam bath application"	22
5.1.3	Home screen "Caldarium application"	23
5.1.4	Home screen "Rasul application"	24
5.1.5	Home screen "Fin sauna application"	25
5.1.6	Home screen "Bio sauna application"	26
5.2	Function of the warning triangle	28
5.3	Function and navigation elements	28
5.4	Configuration of the control software	29
5.4.1	Accessing the main menu	29
6	**Configuration of SPA control software**	**33**
6.1	Configuration processes based on the SPA application	33
6.1.1	Configuration procedure for steam shower application	33
6.1.2	Configuration procedure for steam bath application	38
6.1.3	Configuration procedure for steam bath application with optional bench heating	40
6.1.4	Configuration procedure for Caldarium application	42
6.1.5	Configuration procedure for Rasul application	44
6.1.6	Configuration procedure for Bio sauna application	46
6.1.7	Configuration procedure for dual cabin applications for small cabins	48

6.1.8	Configuration procedure for dual cabin applications for medium size cabins	51
6.1.9	Configuration of several SPA displays	52
6.2	Settings in the "Service" menu	53
6.3	Settings in the "Engineering" menu	55
7	**Maintenance**	**66**
7.1	Important notes on maintenance	66
7.2	Maintenance intervals	67
7.3	Maintenance list	69
7.4	Removing and installing components for maintenance	70
7.4.1	Preparing the Condair Omega for the removal of components	70
7.4.2	Removal and installation of the steam tank	70
7.4.3	Removal and installation of the filling cup, the level unit and the water hoses	75
7.4.4	Removal and installation of the drain pump	77
7.4.5	Removal and installation of the inlet valve	78
7.4.6	Removal and installation of the steam tank receptacle	79
7.5	Notes on cleaning the unit components	80
7.6	Notes on cleaning agents	82
7.7	Replacing the optional filter cartridge	83
7.8	Resetting the maintenance counter	85
8	**Fault elimination**	**86**
8.1	Important notes on fault elimination	86
8.2	Fault indication	87
8.3	Malfunction list	88
8.4	Resetting the fault indication	98
8.5	Replacing the fuses and backup battery in the control unit	99
9	**Taking out of service/Disposal**	**101**
9.1	Taking out of service	101
9.2	Disposal/Recycling	101
10	**Product specification**	**102**
10.1	Performance data / Fuses "F5" voltage supply	102
10.2	Operating data	102
10.3	Connections/Dimensions/Weights	103
10.4	Certificates	103
11	**Appendix**	**104**
11.1	Program descriptions SPA applications	104
11.1.1	Steam shower application	104
11.1.2	Steam bath application	104
11.1.3	Caldarium application	105
11.1.4	Rasul application	106
11.1.5	Fin sauna application	107
11.1.6	Bio sauna application	108

1 Introduction

1.1 To the very beginning

We thank you for having purchased the **Condair Omega steam generator**.

The Condair Omega steam generator incorporates the latest technical advances and meets all recognized safety standards. Nevertheless, improper use of the Condair Omega steam generator may result in danger to the user or third parties and/or damage to property.

To ensure a safe, proper, and economical operation of the Condair Omega steam generator, please observe and comply with all information and safety instructions contained in the present documentation as well as in the separate documentations of the components installed in the humidification system.

If you have questions after reading this documentation, please contact your Condair representative. They will be glad to assist you.

1.2 Notes on the operation manual

Limitation

The subject of this operation manual is the Condair Omega steam generator in its different versions. Options and accessories are only described insofar as this is necessary for proper operation of the equipment. Further information on options and accessories can be obtained in the respective instructions.

This operation manual is restricted to the **commissioning**, **operation**, **maintenance** and **troubleshooting** of the Condair Omega steam generator and is meant for **well trained personnel being sufficiently qualified for their respective work**.

This operation manual is supplemented by various separate items of documentation (e.g. installation manual, spare parts list, etc.), which are included in the delivery as well. Where necessary, appropriate cross-references are made to these publications in the operation manual.

Symbols used in this manual

CAUTION!

The catchword "CAUTION" used in conjunction with the general caution symbol designates notes in this operation manual that, if neglected, may cause **damage and/or malfunction of the unit or damage to property**.

WARNING!

The catchword "WARNING" used in conjunction with the general caution symbol designates safety and danger notes in this operation manual that, if neglected, may cause **injury to persons**.

DANGER!

The catchword "DANGER" used in conjunction with the general caution symbol designates safety and danger notes in this operation manual that, if neglected, may lead to **severe injury or even death of persons**.

Safekeeping

Please safeguard this operation manual in a safe place, where it can be immediately accessed. If the equipment changes hands, the documentation must be passed on to the new operator.

If the documentation gets misplaced, please contact your Condair representative.

Language versions

This operation manual is available in other languages. Please contact your Condair representative for information.

2 For your safety

General

Every person working with the Condair Omega must have read and understood the Condair Omega operation manual and installation manual before carrying out any work.
Knowing and understanding the contents of the operation manual and installation manual is a basic requirement for protecting personnel against any kind of danger, to prevent faulty operation, and to operate the Condair Omega safely and correctly.

All icons, signs and markings applied to the components of the Condair Omega must be observed and kept in readable state.

Qualification of personnel

All work described in this operation manual **may only be carried out by specialists who are well trained and adequately qualified and are authorized by the customer**.
For safety and warranty reasons any action beyond the scope of this manual must be carried out only by qualified personnel authorised by Condair.

It is assumed that all persons working with the Condair Omega are familiar and comply with the appropriate regulations on work safety and the prevention of accidents.

The Condair Omega steam generator may not be used by persons (including children) with reduced physical, sensory or mental abilities or persons with lacking experience and/or knowledge.
Children must be supervised to make sure that they do not play with the Condair Omega steam generator.

Intended use

The Condair Omega steam generator is intended exclusively for generation of steam for steam shower, steam bath, Caldarium and Rasul applications within the specified operating conditions.
Any other type of application, without the written consent of Condair, is considered as not conforming with the intended purpose and may lead to the Condair Omega becoming dangerous and will void any warranty.
Operation of the equipment in the intended manner requires **that all the information contained in this operation manual are observed (in particular the safety instructions)**.

Danger that may arise from the Condair Omega steam generator

DANGER!
Danger of electric hazard!

The Condair Omega is mains powered. Live parts may be exposed when the unit is open. Touching live parts may cause severe injury or danger to life.

Prevention: Before carrying out any work set the Condair Omega out of operation as described in *chapter 4.6* (switch off the unit, disconnect it from the mains and stop the water supply) and secure the unit against inadvertent power-up.

WARNING!
Hot water vapour - Danger of scalding!

The Condair Omega produces hot water vapour. There is danger of scalding when coming in contact with hot water vapour.

Prevention: Do not carry out any work on the steam system during operation (steam lines, steam distributor, etc.). If the steam system is leaky set the Condair Omega immediately out of operation as described in *chapter 4.6*. Correctly seal the steam system before putting the unit into operation again.

WARNING!
Danger of burning!

During operation the components of the steam system (steam tank, steam distributor, etc.) get very hot (up to 100 °C). There is danger of burning when touching the hot components.

Prevention: Before carrying out any work on the steam system set the Condair Omega out of operation as described in *chapter 4.6*, then wait until the components have cooled down sufficiently thus preventing danger of burning.

WARNING!

High humidity can lead to the growth of biological organisms and thus endanger the health of people.

Prevention: To prevent this, the cabin in which the steam is blown must be cleaned regularly in accordance with the applicable hygiene guidelines.

Preventing unsafe operation

If it is suspected that **safe operation is no longer possible**, the Condair Omega should immediately **be shut down and secured against accidental power-up according to** *chapter 4.6*. This can be the case under the following circumstances:

– if the Condair Omega is damaged
– if the electrical installations are damaged
– if the Condair Omega is no longer operating correctly
– if connections and/or piping are not sealed

All persons working with the Condair Omega must report any alterations to the unit that may affect safety to the owner without delay.

Prohibited modifications to the unit

No modifications must be undertaken on the Condair Omega without the express written consent of Condair Group AG.

For the replacement of defective components use exclusively **original accessories and spare parts** available from your Condair representative.

3 Product Overview

3.1 Models overview

Steam generators Condair Omega are available in **two unit sizes** with **different heating voltages** and **steam capacities ranging from 2 kg/h up to a maximum of 20 kg/h**.

Model Condair Omega	Unit size		Max. steam capacity in kg/h	P_N max. in kW	Heating voltage
	Small	Medium			
2	x		2	2.0	230 V/1~/50...60 Hz
4	x		4	3.5	
6	x		6	5.0	
8	x		8	6.5	
6	x		6	5.0	400 V/3~/50...60 Hz
8	x		8	6.5	
12		x	12	9.5	
16		x	16	12.5	
20		x	20	15.5	

Key model designation

Example:
Condair Omega 8

Product designation:

Max. steam capacity in kg/h

3.2 Identification of the unit

The identification of the unit is found on the specification label:

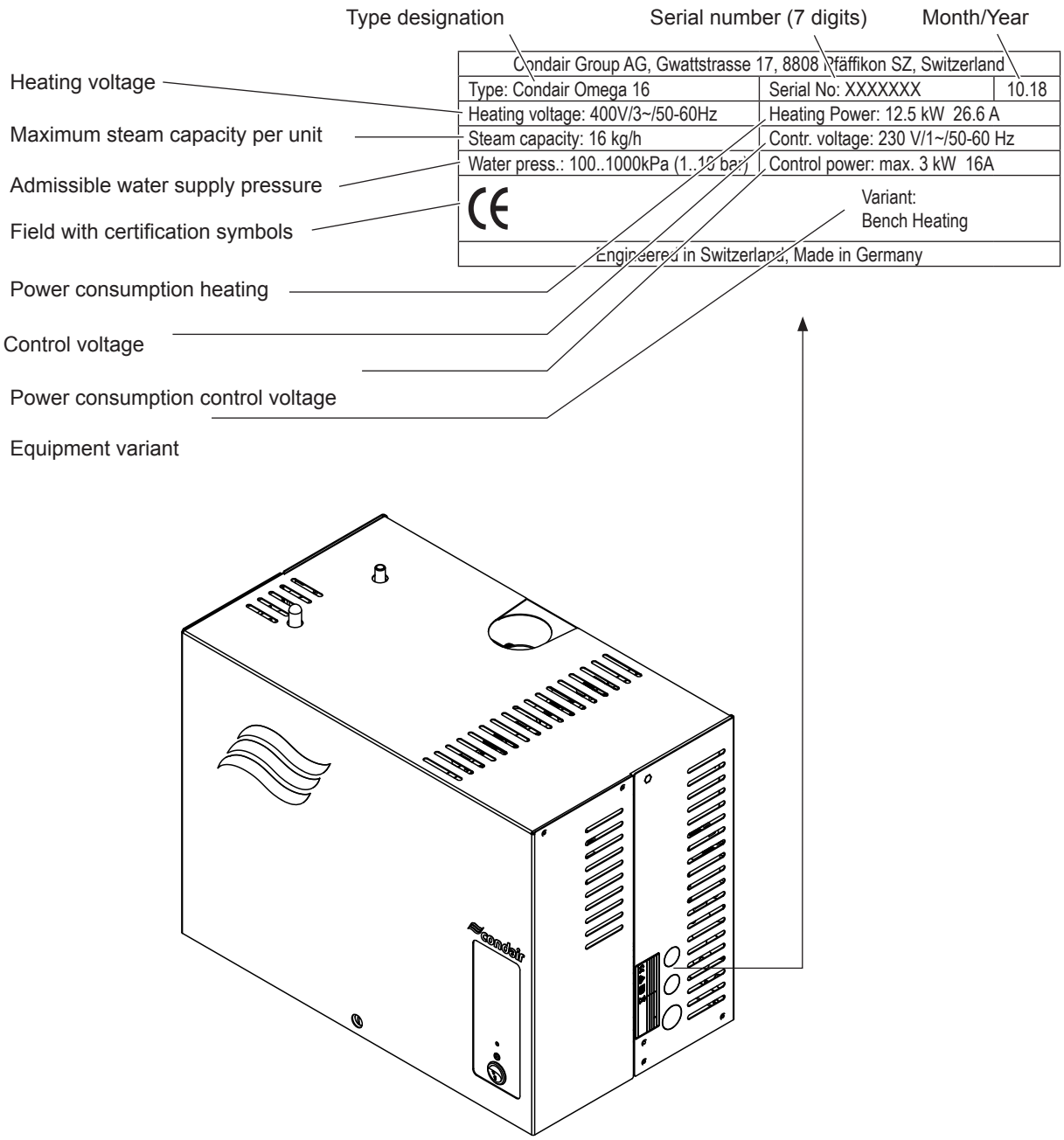

Fig. 1: Location of the specification label

3.3 Construction of the Condair Omega steam generator

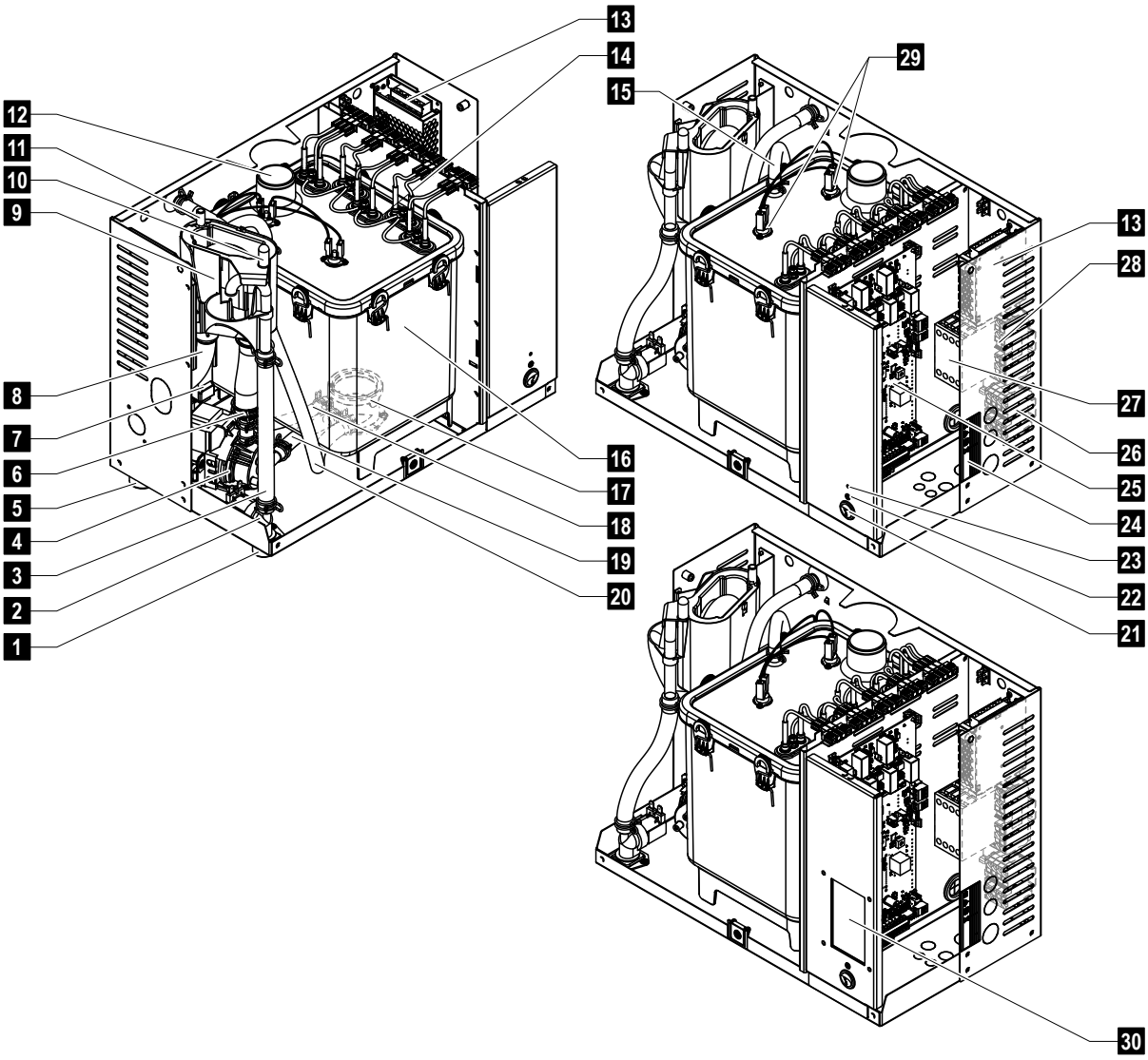

1 Water supply connector G 3/4"
2 Inlet valve
3 Water supply hose
4 Drain pump
5 Water drain connector ø30 mm
6 Water fill and drain hose
7 Level unit
8 Drain hose
9 Filling cup
10 Condensate connector ø10 mm (back to steam tank)
11 Condensate connector ø10 mm (to drain)
12 Steam outlet connector
ø30 mm (Small) / ø45 mm (Medium)
13 24 V power supply
14 Heating elements
15 Pressure equalizing hose
16 Steam tank
17 Coupling sleeve
18 Level hose
19 Pump hose
20 Manual drain hose
21 Unit switch
22 Status LED
23 Reset button maintenance counter
24 Specification label
25 Omega or SPA control board
26 Terminals voltage supply ("L1", "L2", "L3" and "PE")
27 Heating contactor
28 Terminals voltage supply ("N")
29 Over temperature switches
30 SPA Display (option)

Fig. 2: Construction Condair Omega steam generator (figure shows medium sized unit)

3.4 Functional description

The Condair Omega steam generator is an atmospheric steam generator. It operates on the resistance heating principle and is designed for steam generation for steam shower, steam bath, Caladarium and Rasul applications.

Water supply

The water is supplied via a filter valve (accessory "Z261") to the steam generator. It reaches the steam tank via the level controlled inlet valve and the open filling cup.
Note: The open filling cup is designed in such a way, that the supply water is separated from the unit water. That means, that no unit water can flow back into the supply water line.

Level regulation

The water level in the steam tank is continuously monitored with the level unit. If the water level reaches a preset level (due to the evaporation process) the level unit supplies a signal to the controller. This opens the inlet valve and the steam tank is filled up. When the preset operating level is reached, the level unit supplies another signal to the controller to close the inlet valve.
The pressure equalizing pipe connected to steam tank and the level unit ensures that the water levels are the same in the steam tank and the level unit.

Steam generation regulation

The steam is produced in the steam tank by one or several resistance heating elements. The integrated continuous controller or an external controller control the steam production in steps from 0 to 100 %.
Alternatively the Condair Omega can be controlled also via an On/Off controller.

Flushing

The evaporation process increases the concentration of minerals in the water of the steam tank. A suitable volume of water must be flushed out of the steam tank from time to time and replaced by fresh water to ensure that this concentration does not exceed a specific value unsuitable for operation.
The Condair Omega consists of the following two forms of flushing:

– **Automatic flushing** takes place as soon as the water in the steam tank exceeds the upper operating level (e.g. by foaming of the water).
– **Flushing dependent on water quality**.

Automatic or water quality dependent flushing takes place depending on the water quality and the operating data. If the lowest operating level is reached during the flushing process, the inlet valve remains open until the water level in the steam tank has reached the normal working level again. If the lowest operating level is not reached, the inlet valve is closed.

3.5 System overview Condair Omega

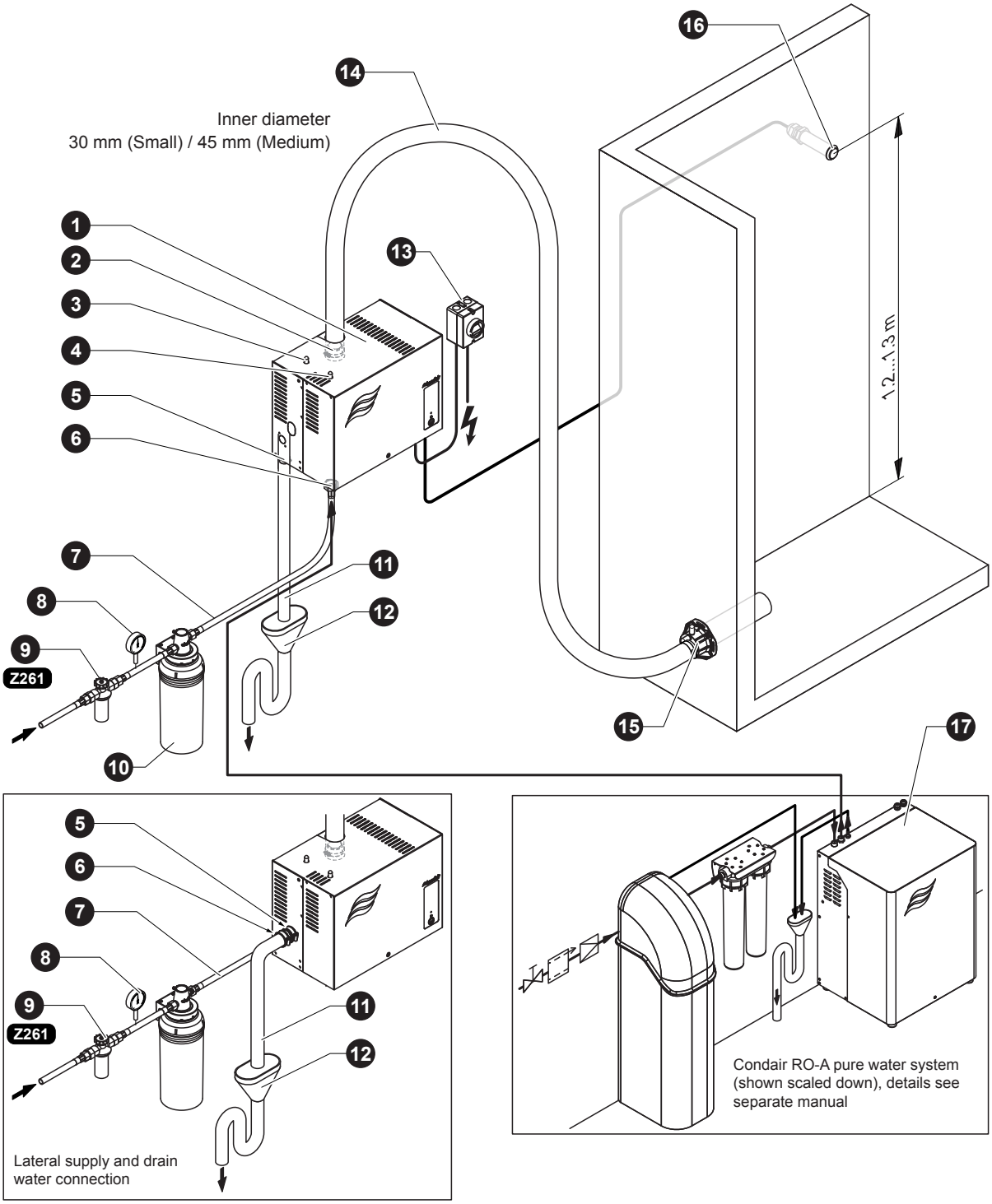

1 Steam generator
2 Steam outlet connector ø30 mm (Small) / ø45 mm (Medium)
3 Condensate connector ø10 mm (to drain)
4 Condensate connector ø10 mm (back to steam tank)
5 Water drain connector (bottom connector: ø30 mm lateral connector ø40 mm)
6 Water supply connector G 3/4"
7 Water supply line (by others)
8 Manometer (recommended, by others)
9 Filter valve (accessory "Z261")
10 Filter cartridge (accessory "Size S" or "Size L")
11 Drain hose (by others)
12 Open funnel with water trap (by others)
13 Electrical isolator voltage supply
14 Steam hose(accessory "DS60" or "DS80")
15 Steam distributor
16 Temperature sensor
17 Condair RO-A pure water system (separate product)

Fig. 3: System overview Condair Omega

4 Operation

The Condair Omega steam generator may be commissioned and operated only by persons familiar with the Condair Omega steam generator and adequately qualified. It is the owner's responsibility to verify proper qualification of the personnel.

4.1 First-time commissioning

The first-time commissioning must always be done by a service technician of your Condair representative or a well trained and authorised person of the customer. Therefore the current manual does not provide detailed information on this procedure.

The following steps are carried out upon first-time commissioning in the specified order:

- Inspecting the steam generator for correct installation.
- Inspecting the electrical installation
- Inspecting the water installation
- Inspecting the steam installation
- Flushing and deaerating the water supply line
- Determining the **carbonate hardness** of the supply water (by measurement or from the local water supplier)
- Configuring the control software of the Condair Omega via the integrated web interface (see separate web interface operation manual) or the SPA Display (see *chapter 6.1*).
- Carrying out test runs including checking of the control and monitoring devices.
- Filling out the commissioning record.

4.2 Display and operating elements

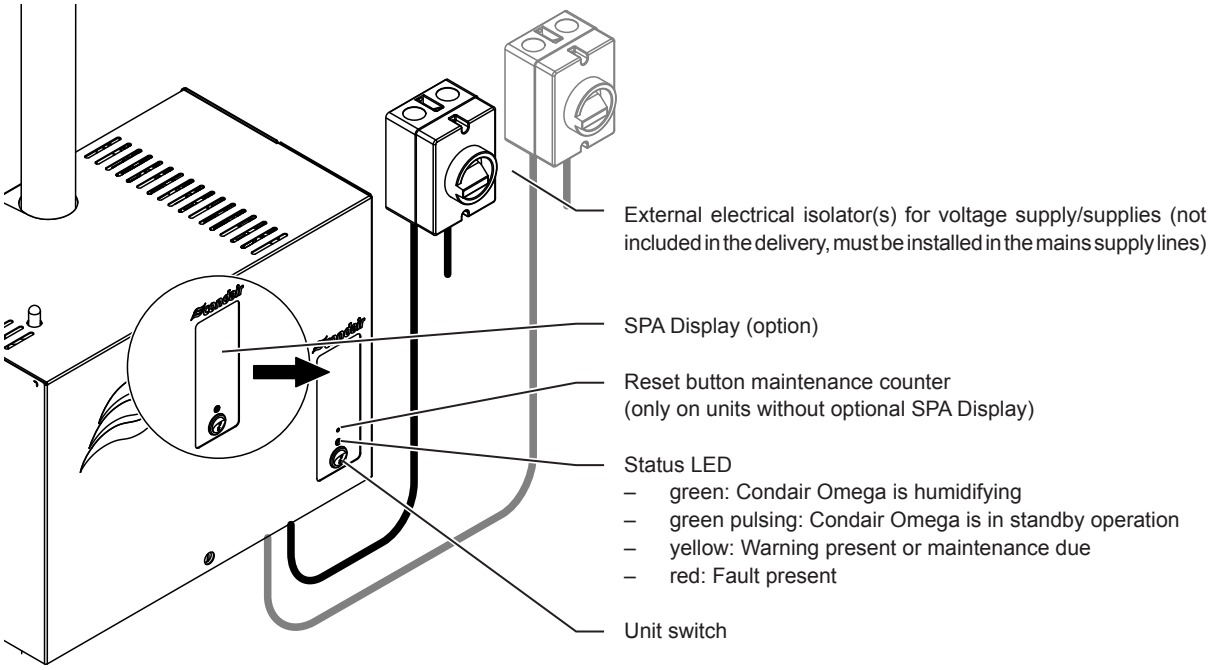

Fig. 4: Display and operating elements

DANGER!
Risk of electric shock!

After switching off the unit switch, there is still live voltage inside the control compartment of the Condair Omega. **Therefore, before opening the unit the steam generator must be always separated from the mains supply/supplies via the electrical isolator(s).**

CAUTION!

If the Condair Omega controls a sauna heater, it must be ensured that the sauna heater is equipped with a approved safety system (e.g. cover protection) to avoid switching on in an insecure condition (e.g. towel on a sauna heater). See Condair Omega installation instructions. Otherwise, it is not permitted to use remote control devices which controls and regulates a device by means of a command that can be made outside the range of vision of the controlled device (SPA display, KNX, Modbus, web interface, etc.). This includes the timer functions as well.

4.3 Commissioning after an interruption of operation

The following description outlines the start up procedure after an interruption of operation (e.g. after servicing the steam generator). It is assumed that first-time commissioning has been carried out properly by the service technician of your Condair representative and the Condair Omega has been configured accordingly.

1. When putting the steam generator into operation after work has been carried out on the steam system, the operating personnel must check whether the steam pipe is open over the entire length.

   WARNING!
   Danger of scalding!

   A steam line that is reduced in cross section or completely closed will cause an excessive increase in pressure in the steam tank when the unit is operating and could lead to the risk of scalding accidents!

2. Examine the steam generator and installation for possible damage.

   DANGER!

   A damaged unit or systems with damaged installations may present danger to human life or cause severe damage to material assets.

   Therefore: Damaged systems and/or systems with damaged or faulty installations must not be operated.

3. Relocate the unit cover and lock it with the retaining screw.
4. Open the filter valve / shut-off valve in the water supply line.
5. Switch on the electrical isolator(s) in the mains supply line(s).
6. Switch on the unit switch of the steam generator.

   The Condair Omega carries out an automatic system test (initialising). If a malfunction is detected during the system test, the status LED indicates a "Warning" (LED lights yellow) or "Fault" (LED lights red).

   If the is successful, the steam tank fills up and a function check on the level unit is carried out.
   Note: If a malfunction is detected during the function check on the level unit, the status LED indicates a "Warning" (LED light yellow) or "Fault" (LED light red).

   If the function check on the level unit is successful, the Condair Omega will be in **normal operating mode and the LED blinks green**. As soon as a steam demand is present or the bathing operation is started manually, the heating current is switched on, the status LED lights green and steam is produced after a short time.

4.4 Notes on operation

After 24 hours in standby operation (no humidity demand), the steam tank is emptied automatically. The steam tank remains empty and is not filled until a steam demand is present or the bathing operation is started manually.

If, during operation, it is recognized that consistently foaming occurs in the steam tank, the carbonate hardness setting of the inlet water should be increased. As a result, the steam tank of the Condair Omega is drained more frequently and thus the foam formation is counteracted.

4.5 Inspections during operation

During operation the Condair Omega and the humidification system have to be inspected weekly. On this occasion check the following:

- the water and steam installations for any leaks.
- the steam generator and the other system components for correct fixing and any damage.
- the electric installation for any damage.

If the inspection reveals any irregularities (e.g. leakages, error indication) or any damaged components take the Condair Omega out of operation as described in *chapter 4.6*. Then, contact your Condair representative.

4.6 Taking the unit out of operation

In order to take the Condair Omega steam generator out of operation (e.g. for maintenance purpose), perform the following steps:

1. If maintenance work on the water system of the Condair Omega is to be carried out, the steam tank must be emptied. Proceed as follows:
   a. Switch off the Condair Omega via the unit switch.
   b. Wait 5 seconds, then switch the Condair Omega on again. If the drain pump starts, wait 60 seconds (with the Omega Medium 100 seconds) until the steam tank has been emptied. If the drain pump does not start automatically within 10 seconds (e.g. because of a pump failure), drain the steam tank manually via the manual drain hose (see *step 5*).
2. Close the shut-off valve in the water supply line.
3. Switch off the Condair Omega via the unit switch (if not yet switched off).
4. **Disconnect Condair Omega from the mains**: Switch off the electrical isolator(s) in the mains supply line(s) and secure switch(es) in "**Off**" position against accidentally being switched on, or clearly mark the switch.
5. If you have to carry out work on the water system: Loosen the retaining screw on the unit cover, remove the unit cover, then drain (residual) water from the steam tank into an empty bucket via the manual drain hose (position of the drain hose, see *Fig. 2*).

WARNING!
Danger of burning!

The water in the steam tank can be hot (up to 95 °C). There is danger of burning when draining the steam tank via the manual drain hose shortly after steam has been produced.

Prevention: wear isolating gloves and be careful when draining the water via the manual drain hose.

5 Working with the SPA Display

5.1 Home screens

After switching on the Condair Omega and the automatic system test the steam generator is in **normal operating** mode and the **Home screen** is shown. The appearance of the Home screen depends on the configuration of the control software.

5.1.1 Home screens "Steam shower application"

5.1.1.1 Home screen with activated "Temperature control"

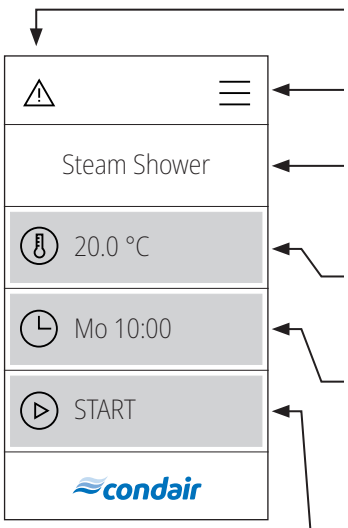

Warning triangle (function see *chapter 5.2*)

Function and navigation elements (see *chapter 5.3*)

Selected SPA application
Note: With dual cabin application, you can toggle between the two applications by pressing on the SPA application field.

Current temperature in the steam cabin in °C/°F.
Note: By pressing this button you access the settings window for determining the temperature setpoint value.

Next starting time for day timer (time only) or week timer (day of the week and time) controlled bathing operation, or "Off" if no day timer has been set.
Note: Pressing this button opens the settings menu for configuring the day timer settings.
Note: After having started the bathing operation (via the <START> button or the timer), this field displays the remaining time until the end of the bathing operation.
Note: This field is only displayed if the day timer function (factory setting) and/or the week timer function is/are activated in the "Engineering" menu.

<START>/<STOP> button
Note: By pressing the <START> button you start the bathing operation, the button changes to <STOP>. By pressing the <STOP> button you can stop the bathing operation at any time.

5.1.1.2 Homescreen with operation with "constant steam production"

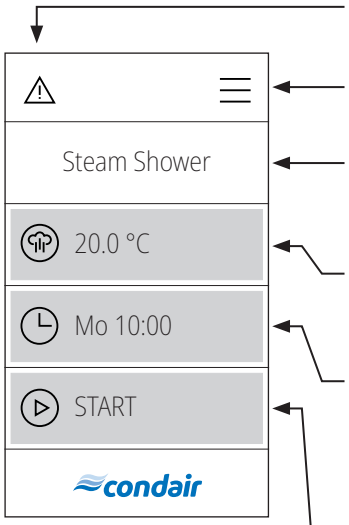

Warning triangle (function see *chapter 5.2*)

Function and navigation elements (see *chapter 5.3*)

Selected SPA application
Note: With dual cabin application, you can toggle between the two applications by pressing on the SPA application field.

Current steam production in % of the maximum steam capacity
Note: By pressing this button you access the settings window where you can set the steam production to "Low", "Mid" or "High".

Next starting time for day timer (time only) or week timer (day of the week and time) controlled bathing operation, or "Off" if no day timer has been set.
Note: Pressing this button opens the settings menu for configuring the day timer settings.
Note: After having started the bathing operation (via the <START> button or the timer), this field displays the remaining time until the end of the bathing operation.
Note: This field is only displayed if the day timer function (factory setting) and/or the week timer function is/are activated in the "Engineering" menu.

<START>/<STOP> button
Note: By pressing the <START> button you start the bathing operation, the button changes to <STOP>. By pressing the <STOP> button you can stop the bathing operation at any time.

5.1.1.3 Home screen with operation with "external control"

Note: In timer mode, steam can only be produced if a timer is active, otherwise the unit is in standby mode.

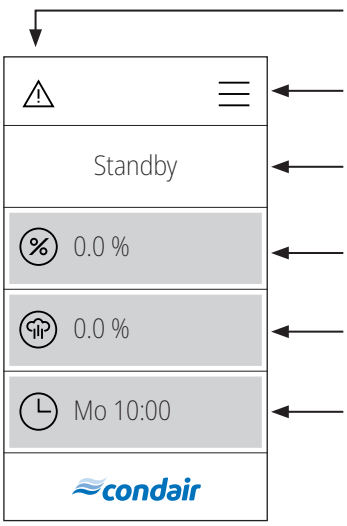

Warning triangle (function see *chapter 5.2*)

Function and navigation elements (see *chapter 5.3*)

Operating status field.

Current demand in % of the maximum steam capacity.

Current steam production in % of the maximum steam capacity.

Next starting time for day timer (time only) or week timer (day of the week and time) controlled bathing operation, or "Off" if no day timer has been set.
Note: Pressing this button opens the settings menu for configuring the day timer settings.
Note: After having started the bathing operation (via the <START> button or the timer), this field displays the remaining time until the end of the bathing operation.
Note: This field is only displayed if the day timer function (factory setting) and/or the week timer function is/are activated in the "Engineering" menu.

5.1.2 Home screen "Steam bath application"

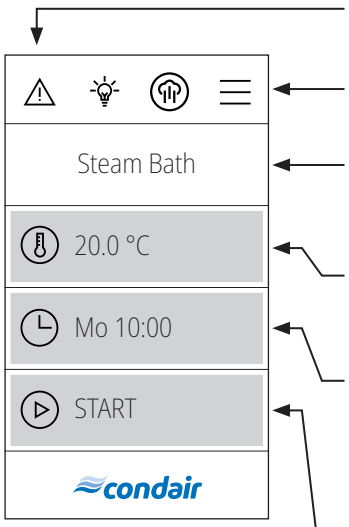

Warning triangle (function see *chapter 5.2*)

Function and navigation elements (see *chapter 5.3*)

Selected SPA application
Note: With dual cabin application, you can toggle between the two applications by pressing on the SPA application field.

Current temperature in the steam cabin in °C/°F.
Note: By pressing this button you access the settings window for determining the temperature setpoint value.

Next starting time for day timer (time only) or week timer (day of the week and time) controlled bathing operation, or "Off" if no day timer has been set.
Note: Pressing this button opens the settings menu for configuring the day timer settings.
Note: After having started the bathing operation (via the <START> button or the timer), this field displays the remaining time until the end of the bathing operation.
Note: This field is only displayed if the day timer function (factory setting) and/or the week timer function is/are activated in the "Engineering" menu.

<START>/<STOP> button
Note: By pressing the <START> button you start the bathing operation, the button changes to <STOP>. By pressing the <STOP> button you can stop the bathing operation at any time.

5.1.3 Home screen "Caldarium application"

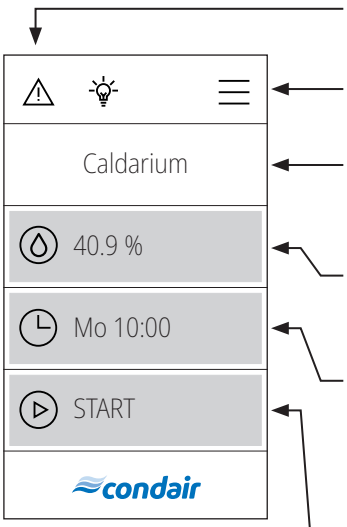

Warning triangle (function see *chapter 5.2*)

Function and navigation elements (see *chapter 5.3*)

Selected SPA application
Note: With dual cabin application, you can toggle between the two applications by pressing on the SPA application field.

Current humidity in the Caldarium cabin in %.
Note: By pressing this button you access the settings window for determining the humidity setpoint value.

Next starting time for day timer (time only) or week timer (day of the week and time) controlled bathing operation, or "Off" if no day timer has been set.
Note: Pressing this button opens the settings menu for configuring the day timer settings.
Note: After having started the bathing operation (via the <START> button or the timer), this field displays the remaining time until the end of the bathing operation.
Note: This field is only displayed if the day timer function (factory setting) and/or the week timer function is/are activated in the "Engineering" menu.

<START>/<STOP> button
Note: By pressing the <START> button you start the bathing operation, the button changes to <STOP>. By pressing the <STOP> button you can stop the bathing operation at any time.

5.1.4 Home screen "Rasul application"

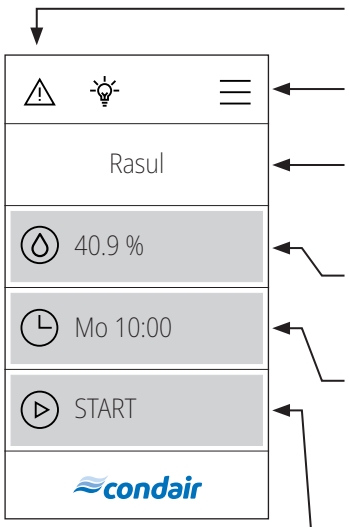

Warning triangle (function see *chapter 5.2*)

Function and navigation elements (see *chapter 5.3*)

Selected SPA application
Note: With dual cabin application, you can toggle between the two applications by pressing on the SPA application field.

Current humidity in the Rasul cabin in %.
Note: By pressing this button you access the settings window for determining the humidity setpoint value.

Next starting time for day timer (time only) or week timer (day of the week and time) controlled bathing operation, or "Off" if no day timer has been set.
Note: Pressing this button opens the settings menu for configuring the day timer settings.
Note: After having started the bathing operation (via the <START> button or the timer), this field displays the remaining time until the end of the bathing operation.
Note: This field is only displayed if the day timer function (factory setting) and/or the week timer function is/are activated in the "Engineering" menu.

<START>/<STOP> button
Note: By pressing the <START> button you start the Rasul operation, the button changes to <STOP>. By pressing the <STOP> button you can stop the Rasul operation at any time.

5.1.5 Home screen "Fin sauna application"

CAUTION! For Fin sauna, the timer functions may only be used if the sauna heater is equipped with a approved safety system (such as cover protection) to avoid switching the sauna heater on in an unsafe condition (e.g. towel on sauna heater).

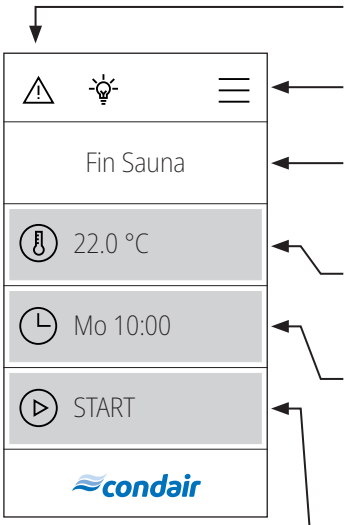

Warning triangle (function see *chapter 5.2*)

Function and navigation elements (see *chapter 5.3*)

Selected SPA application
Note: With dual cabin application, you can toggle between the two applications by pressing on the SPA application field.

Current temperature in the Fin sauna cabin in °C/°F.
Note: By pressing this button you access the settings window for determining the temperature setpoint value.

Next starting time for day timer (time only) or week timer (day of the week and time) controlled bathing operation, or "Off" if no day timer has been set.
Note: Pressing this button opens the settings menu for configuring the day timer settings.
Note: After having started the bathing operation (via the <START> button or the timer), this field displays the remaining time until the end of the bathing operation.
Note: This field is only displayed if the day timer function (factory setting) and/or the week timer function is/are activated in the "Engineering" menu.

<START>/<STOP> button
Note: By pressing the <START> button you start the Fin sauna operation, the button changes to <STOP>. By pressing the <STOP> button you can stop the Fin sauna operation at any time.

5.1.6 Home screen "Bio sauna application"

CAUTION! For Bio sauna, the timer functions may only be used if the sauna heater is equipped with a approved safety system (such as cover protection) to avoid switching the sauna heater on in an unsafe condition (e.g. towel on sauna heater).

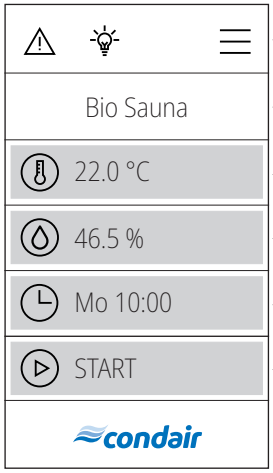

Warning triangle (function see *chapter 5.2*)

Function and navigation elements (see *chapter 5.3*)

Selected SPA application
Note: With dual cabin application, you can toggle between the two applications by pressing on the SPA application field.

Current temperature in the Bio sauna cabin in °C/°F.
Note: By pressing this button you access the settings window for determining the temperature setpoint value [1].

Current humidity in the Bio sauna cabin in %.
Note: By pressing this button you access the settings window for determining the humidity setpoint value [1].

Next starting time for day timer (time only) or week timer (day of the week and time) controlled bathing operation, or "Off" if no day timer has been set.
Note: Pressing this button opens the settings menu for configuring the day timer settings.
Note: After having started the bathing operation (via the <START> button or the timer), this field displays the remaining time until the end of the bathing operation.
Note: This field is only displayed if the day timer function (factory setting) and/or the week timer function is/are activated in the "Engineering" menu.

<START>/<STOP> button
Note: By pressing the <START> button you start the Bio sauna operation, the button changes to <STOP>. By pressing the <STOP> button you can stop the Bio sauna operation at any time.

[1] For temperature-humidity control of a bio sauna, only temperature and humidity setpoints on the left and below of the selected enthalpy curve ("Standard" (factory setting, correct use according to EN60335-2) or "Tolerant" (incorrect use)) can be set (see *Fig. 5* and *Fig. 6*). If the humidity or temperature setpoint is modified, the other setpoint is automatically adjusted to the maximum value according to the selected enthalpy curve.

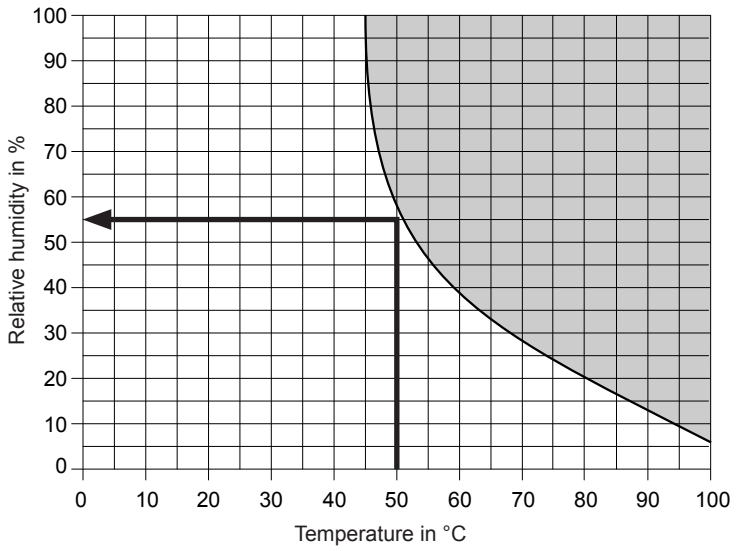

Fig. 5: Enthalpy curve "Standard", correct use according to EN 60335-2

Example: If the setpoint temperature is set to 50 °C, the relative humidity is automatically set to approximately 55%. However, if the critical values are exceeded during bathing operation, the heating (sauna/steam) is automatically switched off and the warning "W178" is displayed.

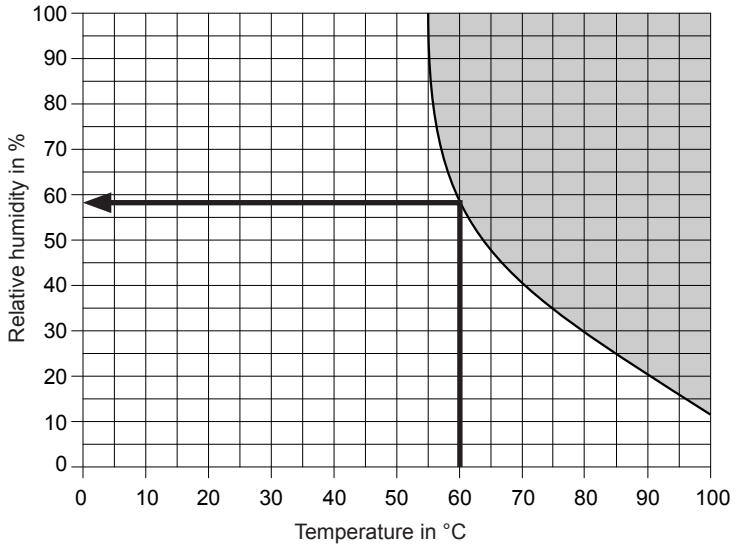

Fig. 6: Enthalpy curve "Tolerant", incorrect use

Example: If the setpoint temperature is set to 60 °C, the relative humidity is automatically set to approximately 58%. However, if the critical values are exceeded during bathing operation, the heating (sauna/steam) is automatically switched off and the warning "W178" is displayed.

5.2 Function of the warning triangle

The warning triangle has the following functions:

Warning triangle	Description
⚠	Warning triangle lights **grey**: The steam generator operates trouble free.
⚠	Warning triangle lights **yellow**: A warning is present or a maintenance is due. The steam generator continues operation. However, depending on the type of warning, certain restrictions in the operation may occur.
⚠	Warning triangle lights **red**: An fault is present. Depending on the type of fault the Condair Omega is stopped or continous normal operation.

5.3 Function and navigation elements

Navigation element	Action
☰	<Menu> button - Accessing the main menu Note: If "Display lock" is set to "On" a password (factory set password "0000") must be entered in order to be able to access the main menu.
🏠	<Home> button - Back to home screen
	<Steam Blast> button - Start and stop of the steam blast function Note: This element only appears on the home screen if the steam blast function has been activated in the menu.
💡	Taste <Cleaning Light> button - Switching the cleaning light on and off
⇦	Jumps back to previous screen (Cancel and back)
∨ ∧	Scroll up/down in the present window or selecting settings options.
✓	Confirm set value or selection (<Tick> button).
✕	Cancel or back to previous screen (<Cancel> button).

5.4 Configuration of the control software

5.4.1 Accessing the main menu

Press the <Menu> button on the top right corner of the display. Then, enter the password "0000" (if main menu is configured with password protection). The main menu appears.
Note: The password for the user menu can be modified in the "Engineering > Admin > Password" submenu.

The content of the user menu depends on the selected SPA application. The following description of the settings in the user menu lists all available parameters of the user menu.

User menu		
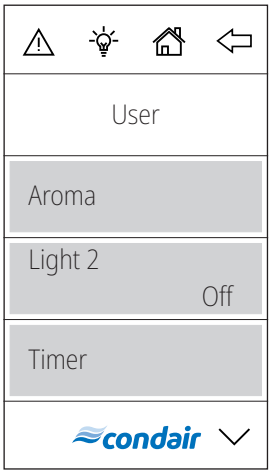	**Aroma**	
	Aroma 1	Setting the intensity level (Level 1 ... Level 5) of the fragrance pump 1 or switching off the fragrance pump 1. **Note**: This menu item appears only if Aroma 1 Mode in the "Engineering" menu is set to "Interval" or "External".
	Aroma 2	Setting the intensity level (Level 1 ... Level 5) of the fragrance pump 2 or switching off the fragrance pump 2. **Note**: This menu item appears only if Aroma 2 Mode in the "Engineering" menu is set to "Interval" or "External".
	Light 2	Turning on and off light 2. **Note**: This menu item appears only if Light 2 Mode in the "Engineering" menu is set to "Auto" or "Manual". **Note**: Light 1 can be switched on and off via the lamp icon at the top of the display.
	Timer **CAUTION!** For Fin sauna/Bio Sauna, the timer functions may only be used if the sauna heater is equipped with a approved safety system (such as cover protection) to avoid switching the sauna heater on in an unsafe condition (e.g. towel on sauna heater)!	

	Day Timer	In the day timer menu, you can specify when the next bathing operation should be started. For that, set the time of the day and the duration of the bathing operation. The bathing operation starts automatically at the set point of time with the corresponding settings. **The day timer is carried out only once**.
		Settings:
		– Timer Mode:
		  – Off: Day timer deactivated
		  – Time: Bathing operation starts time of day controlled.
		– Start Time: Setting the starting time when the bathing operation should start (appears only if "Timer Mode" is set to "Time")
		– Duration: Setting the duration of the bathing operation in minutes.

	Week Timer	The programming of the week timer is equal as the day timer, however with the week timer the bathing operation is **repeated**. For each week day/week day range individual settings can be configured. A maximum of 10 week days/ week day ranges can be specified.
		Note: If the selected time of day is already past, the bathing operation will start on the next set point of time.
		
		Settings:
		– Week Day: Setting the week day or week day range at which the week timer shall be active (Mo-Fr, Mo-Sa, Sa-Su, Mo, Tu, We, Th, Fr, Sa, Su) or deactivating the week timer.
		– Start Time: Setting the time of day at which the bathing operation should start
		– Duration: Setting the duration of the bathing operation in minutes.
		– Sauna mode: Setting the sauna mode to Bio Sauna application or Fin Sauna application.
		– Temperature: Enter the cabin temperature setpoint value in °C/°F for temperature controlled steam shower application, Steam bath application, Bio sauna application and Fin sauna application.
		– Humidity: Setting the cabin humidity setpoint in %rh for Caldarium application, Rasul application and Bio sauna application.
		– Steam Mode: Setting the application mode for the steam shower operation.
		  – Constant Steam
		  – Temp. Control
		– Setpoint: Setting the temperature setpoint (appears only if "Steam Mode" is set to "Temp. Control").
		– Steam Quantity: Setting the steam capacity level "Low", "Mid" or "High" for constant steam operation (appears only if "Steam Mode" is set to "Constant steam").

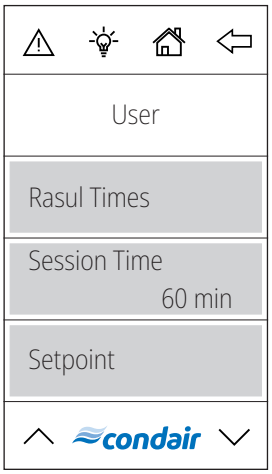

Rasul Times **Note**: This menu item only appears if the car type in the "Engineering" menu is set to "Rasul"!	
Treatment Time	Setting the treatment time in minutes for the Rasul application
Bath Time	Enter the bathing time in minutes for the Rasul application
Shower Time	Enter the shower time in minutes for the Rasul application
Session Time	Setting the duration of the bathing operation in minutes.
Setpoint	
Temperature	Setting the cabin temperature setpoint value in °C/°F for temperature controlled steam shower application, Steam bath application, Bio sauna application and Fin sauna application.
Humidity	Setting the cabin humidity setpoint value in %rF for Caldarium application, Rasul application and Bio sauna application.
Bench Temp.	Setting the temperature setpoint value for the bench heating in °C/°F for steam bath application with optional bench heating, Caldarium application and Rasul application. **Note**: This menu item only appears if the mode of relay 8 or relay 9 in the "Engineering" menu is set to "Bench heating".
Wall Temp.	Setting the temperature setpoint value for the wall heating in °C/°F for Caldarium application and Rasul application. **Note**: This menu item only appears if the mode of relay 8 or relay 9 in the "Engineering" menu is set to "Wall heating".

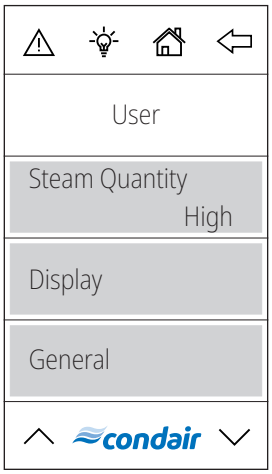

Steam Quantity
Note: This menu item appears only when the steam shower mode in the "Engineering" menu is set to "Constant steam".

In this submenu you determine the steam production for steam shower operation with constant steam production. You can select between three levels ("Low", "Mid" and "High").

The following table shows the steam capacities in % for each level:

	Low	Mid	High
Omega 2	100 %	n/a	n/a
Omega 4	50 %	n/a	100 %
Omega 6	50 %	n/a	100 %
Omega 8	50 %	n/a	100 %
Omega 12	33 %	66 %	100 %
Omega 16	25 %	75 %	100 %
Omega 20	20%	60 %	100 %

Display	
Display Lock	Activating ("On") or deactivating ("Off") the password protection for the main menu. **Note**: The main menu password can be adjusted in the "Engineering" menu! If the password gets lost the display lock can be unlocked any time with the passwords 3562 or 1055.
Language	Selecting the dialogue language of SPA Display.
Brightness	Adjusting the brightness of the SPA display.
Screen Saver Mode	Activating ("On") or deactivating ("Off") the screen saver mode (factory setting: "Off")
Screen Saver Timeout	Adjusting the screen saver timout after which the display is switched off (factory setting: "10 min"). Note: Appears only if "Screen saver Mode" is set to "On".
Theme	Defining the appearance of SPA Display ("Light" or "Dark").
Units	Selecting the units system ("metric" or "imperial").
Date Format	Selecting the date format ("jjjj-mm-tt", "tt.mm.jjjj", "tt/mm/jjjj" or "mm/tt/jjjj")
General	
Date	Setting the current date in the specified date format.
Time	Setting the current time of day in the format "hh:mm".

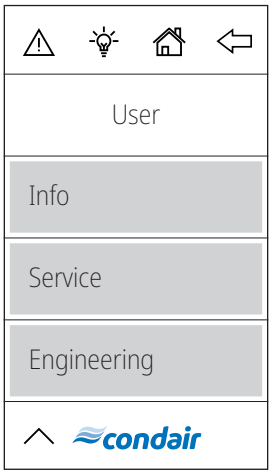

Info

Display of device information.

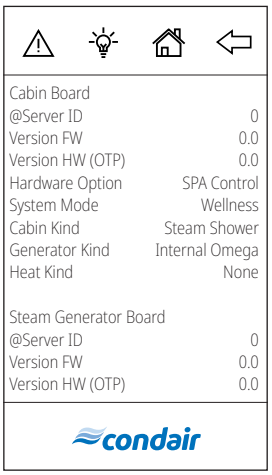

Service

Information regarding the "Service" menu can be found *chapter 6.2*.

Engineering

Information regarding the "Engineering" menu can be found *chapter 6.3*.

6 Configuration of SPA control software

The SPA control software is configured via the "Service" and the "Engineering" menu. *chapter 6.1* describes the configuration processes for the respective SPA applications. In *chapter 6.2* and *chapter 6.3* you will find an overview of the setting parameters of the "Service" and the "Engineering" menu.

6.1 Configuration processes based on the SPA application

6.1.1 Configuration procedure for steam shower application

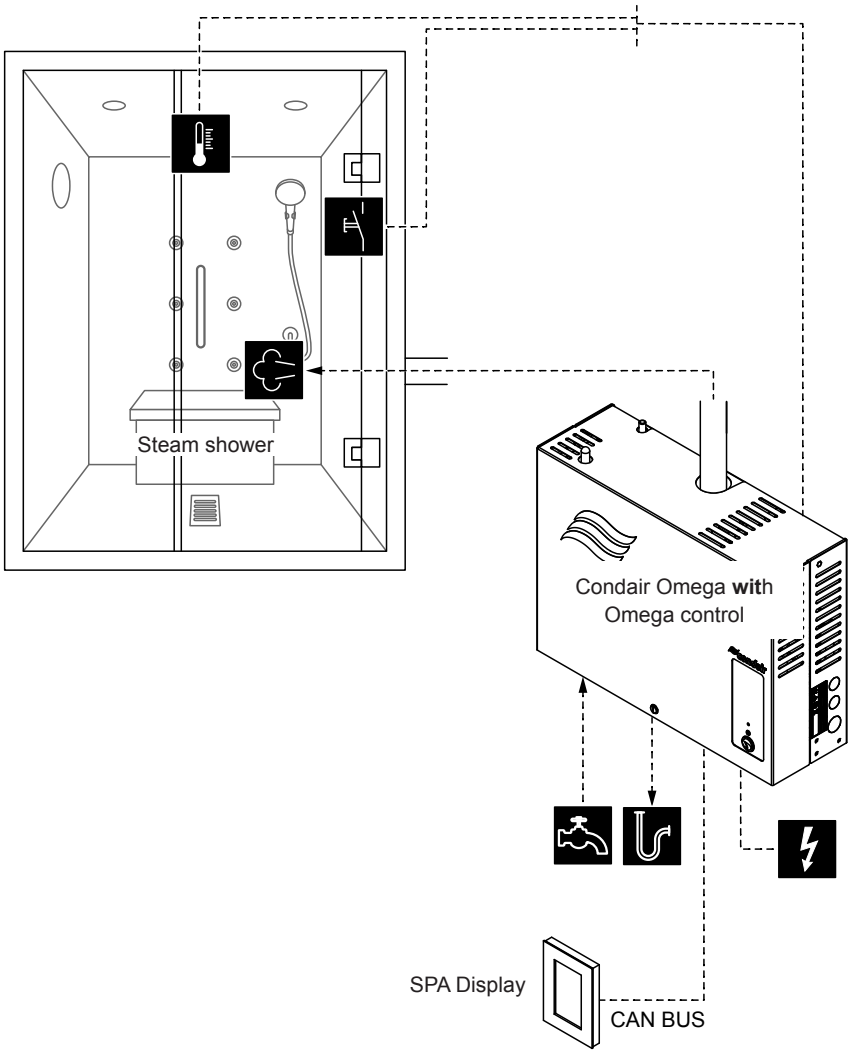

Fig. 7: Condair Omega with Omega control for steam shower application, operation temperature controlled steam production

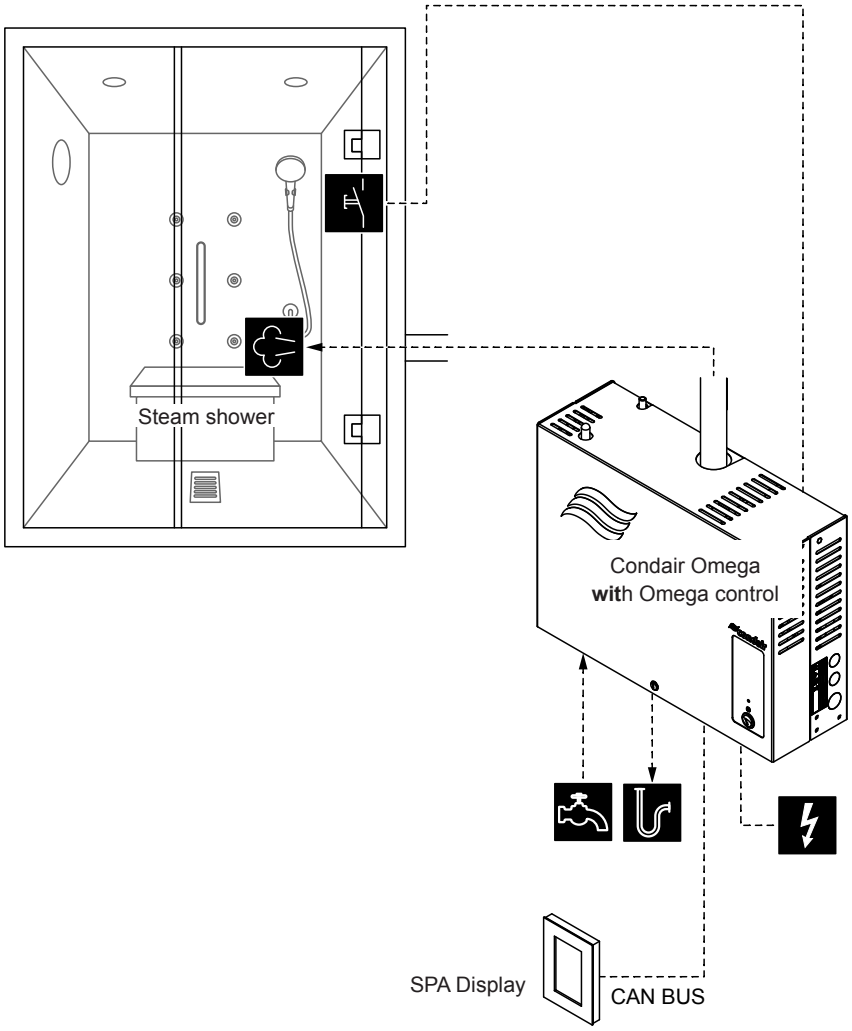

Fig. 8: Condair Omega with Omega control for steam shower application, operation with constant steam production

Configuration procedure for steam shower application with temperature controlled or constant steam production:

1. Reset SPA Control to factory settings.
   (Path: Engineering > SPA Control Board > Factory Reset)
2. **Important**: This step must be carried out only with single cabin application:
   Reset SPA Display to factory settings.
   (Path: Engineering > Admin > Display > Factory Reset)
3. Determine temperature control settings (for temperature controlled steam shower application only):
   (Path: Engineering > Control Settings > Temperature Control)
   - Select temperature sensor type ("PT100", "PT1000 (0.1mA)", "PT1000 (1.0mA)", "KTY (1.0mA)")
   - Set the critical temperature in °C/°F above which a warning appears

4. Determine unit size:
   - Read the unit size on the type plate of the Condair Omega and read out the corresponding values from the following table.

Unit size	Power per stage	Capacity
2 kg/h	1.5 kW	2 kg
4 kg/h [1)]	1.5 kW	4 kg
6 kg/h	2.25 kW	6 kg
8 kg/h	3 kW	8 kg
12 kg/h	3 kW	12 kg
16 kg/h	3 kW	16 kg
20 kg/h	3 kW	20 kg

   [1)] Older Omega 4kg/h units are equipped with a single 3kW heating element. For these devices, the power per stage must be set to 3 kW.

   - Set the power per stage according to the table value.
     (Path: Engineering > SPA Control Board > System Mode > Power per Stage)
   - Set the capacity according to the table value.
     (Path: Engineering > Steam Generator > Tank Settings > Capacity)
5. Determine supply water type and cartridge size:
   - Determine the supply water type ("Tap Water", "RO" or "Filter Cartridge") and the carbonate hardness of the supply water (only if water supply type is set to " Tap Water" or "Filter Cartridge")
     (Path: Service > Steam Generator > Water Supply > Type)
   - Determine cartridge size (only if water supply type is set to "Filter Cartridge")
     (Path: Service > Steam Generator > Filter Cartridge > Cartridge Size)
6. Set current date and time of day:
   (Path: User > General)
   - Set date
   - Set time of day

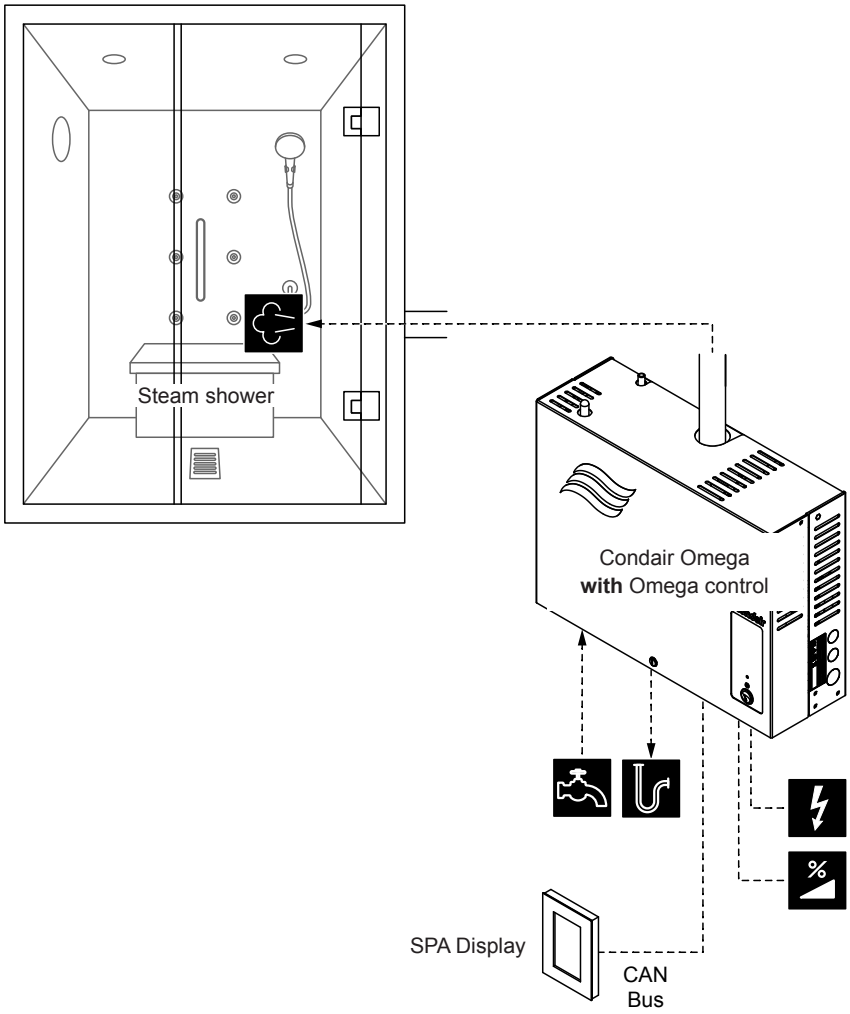

Fig. 9: Condair Omega with Omega control for steam shower application, operation with external demand signal

Configuration procedure for steam shower application with, operation with external demand signal:

1. Reset SPA Control to factory settings.
   (Path: Engineering > SPA Control Board > Factory Reset)
2. **Important**: This step must be carried out only with single cabin application:
   Reset SPA Display to factory settings.
   (Path: Engineering > Admin > Display > Factory Reset)
3. Set system mode to "**Steam Generator**".
   (Path: Engineering > SPA Control Board > System Mode > Steam Generator)
4. Determine demand signal setting:
   (Path: Engineering > Steam Generator > Steaming Settings > Cntrl. Input Signal)
   - Determine the demand signal type ("0 - 5V", "1 - 5V", "0 - 10V", "2 - 10V", "0 - 20V", "0 - 16V", "3 - 16V", "0 - 20mA", "4 - 20mA", "On/Off" or "0 - 4V")

5. Determine unit size:
   - Read the unit size on the type plate of the Condair Omega and read out the corresponding values from the following table.

Unit size	Power per stage	Capacity
2 kg/h	1.5 kW	2 kg
4 kg/h [1)]	1.5 kW	4 kg
6 kg/h	2.25 kW	6 kg
8 kg/h	3 kW	8 kg
12 kg/h	3 kW	12 kg
16 kg/h	3 kW	16 kg
20 kg/h	3 kW	20 kg

   [1)] Older Omega 4kg/h units are equipped with a single 3kW heating element. For these devices, the power per stage must be set to 3 kW.

   - Set the power per stage according to the table value.
     (Path: Engineering > SPA Control Board > System Mode > Power per Stage)
   - Set the capacity according to the table value.
     (Path: Engineering > Steam Generator > Tank Settings > Capacity)
6. Determine supply water type and cartridge size:
   - Determine the supply water type ("Tap Water", "RO" or "Filter Cartridge") and the carbonate hardness of the supply water (only if water supply type is set to " Tap Water" or "Filter Cartridge")
     (Path: Service > Steam Generator > Water Supply > Type)
   - Determine cartridge size (only if water supply type is set to "Filter Cartridge")
     (Path: Service > Steam Generator > Filter Cartridge > Cartridge Size)
7. Set current date and time of day:
   (Path: User > General)
   - Set date
   - Set time of day

6.1.2 Configuration procedure for steam bath application

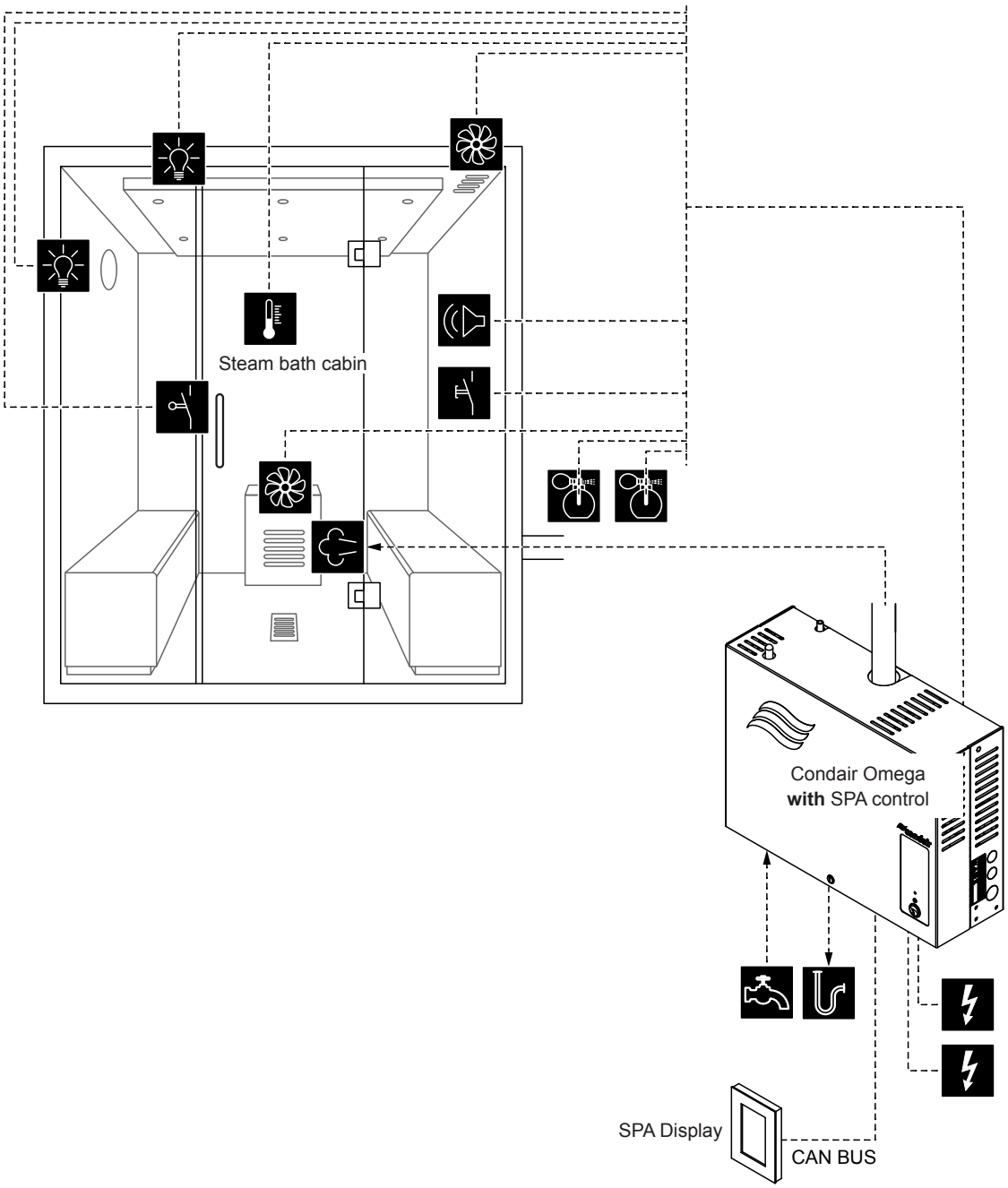

Fig. 10: Condair Omega with SPA Control and equippment for steam bath application

Configuration procedure for steam bath application:

1. Reset SPA Control to factory settings.
   (Path: Engineering > SPA Control Board > Factory Reset)
2. **Important**: This step must be carried out only with single cabin application:
   Reset SPA Display to factory settings.
   (Path: Engineering > Admin > Display > Factory Reset)
3. Set cabin type to "**Steam Ba**th".
   (Path: Engineering > SPA Control Board > Cabin Kind > Steam Bath)

4. Determine temperature control settings:
   (Path: Engineering > Control Settings > Temperature Control)
   - Select temperature sensor type ("PT100", "PT1000 (0.1mA)", "PT1000 (1.0mA)", "KTY (1.0mA)")
   - Set the critical temperature in °C/°F above which a warning appears
5. Determine accessory control:
   (Path: Engineering > Accessories)
   - Determine the control of Light 1 and Light 2
   - Determine the control of the fragrance pump 1 (Aroma 1) and fragrance pump 2 (Aroma 2)
   - Determine the fan control (for single stage fans 1 and 2 or three-stage fan 1)
   - Determine the control of relay 8 and 9
6. Determine unit size:
   - Read the unit size on the type plate of the Condair Omega and read out the corresponding values from the following table.

Unit size	Power per stage	Capacity
2 kg/h	1.5 kW	2 kg
4 kg/h [1)]	1.5 kW	4 kg
6 kg/h	2.25 kW	6 kg
8 kg/h	3 kW	8 kg
12 kg/h	3 kW	12 kg
16 kg/h	3 kW	16 kg
20 kg/h	3 kW	20 kg

   [1)] Older Omega 4kg/h units are equipped with a single 3kW heating element. For these devices, the power per stage must be set to 3 kW.

   - Set the power per stage according to the table value.
     (Path: Engineering > SPA Control Board > System Mode > Power per Stage)
   - Set the capacity according to the table value.
     (Path: Engineering > Steam Generator > Tank Settings > Capacity)
7. Determine supply water type and cartridge size:
   - Determine the supply water type ("Tap Water", "RO" or "Filter Cartridge") and the carbonate hardness of the supply water (only if water supply type is set to " Tap Water" or "Filter Cartridge")
     (Path: Service > Steam Generator > Water Supply > Type)
   - Determine cartridge size (only if water supply type is set to "Filter Cartridge")
     (Path: Service > Steam Generator > Filter Cartridge > Cartridge Size)
8. Set current date and time of day:
   (Path: User > General)
   - Set date
   - Set time of day

6.1.3 Configuration procedure for steam bath application with optional bench heating

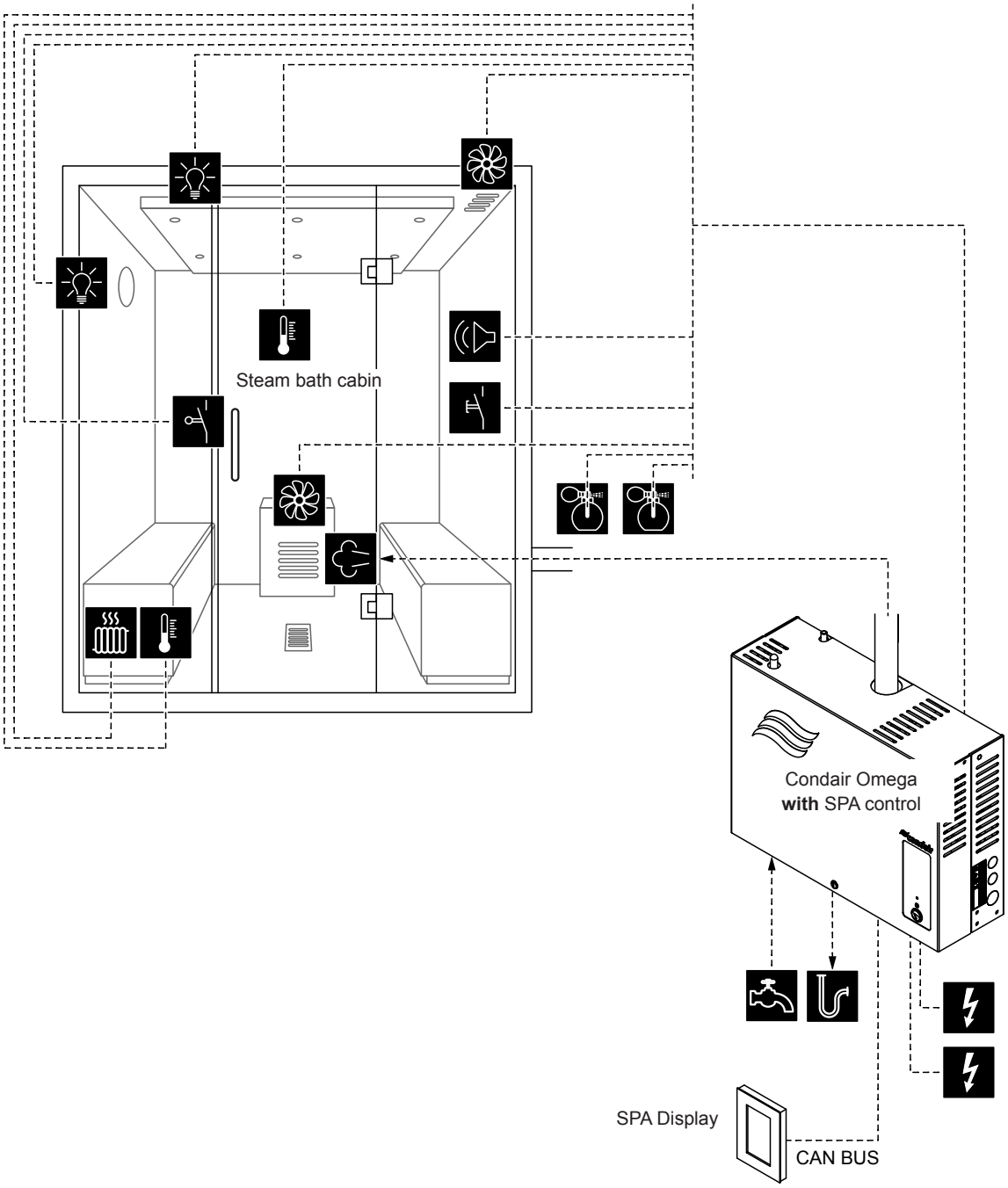

Fig. 11: Condair Omega with SPA Control and equippment for steam bath application with optional bench heating

Configuration procedure for steam bath application with optional bench heating:

1. Reset SPA Control to factory settings.
   (Path: Engineering > SPA Control Board > Factory Reset)
2. **Important**: This step must be carried out only with single cabin application:
   Reset SPA Display to factory settings.
   (Path: Engineering > Admin > Display > Factory Reset)
3. Set cabin type to "**Steam Ba**th".
   (Path: Engineering > SPA Control Board > Cabin Kind > Steam Bath)

4. Determine temperature control settings:
   (Path: Engineering > Control Settings > Temperature Control)
   - Select temperature sensor type ("PT100", "PT1000 (0.1mA)", "PT1000 (1.0mA)", "KTY (1.0mA)")
   - Set the critical temperature in °C/°F above which a warning appears
5. Determine accessory control:
   (Path: Engineering > Accessories)
   - Determine the control of Light 1 and Light 2
   - Determine the control of the fragrance pump 1 (Aroma 1) and fragrance pump 2 (Aroma 2)
   - Determine the fan control (for single stage fans 1 and 2 or three-stage fan 1)
   - Determine the control of relay 8 and 9 (Path: Engineering > Accessories > Outputs)
     – "Relay 8 Mode": Set to "Bench Heater" to activate the bench heating
     – "Relay 9 Mode": freely configurable
6. Determine temperature control settings for the bench heating:
   (Path: Engineering > Control Settings > Bench Temp. Control)
   - Select temperature sensor type ("PT100", "PT1000 (0.1mA)", "PT1000 (1.0mA)", "KTY (1.0mA)")
   - Set the critical temperature in °C/°F above which a warning appears.
7. Determine unit size:
   - Read the unit size on the type plate of the Condair Omega and read out the corresponding values from the following table.

Unit size	Power per stage	Capacity
2 kg/h	1.5 kW	2 kg
4 kg/h [1)]	1.5 kW	4 kg
6 kg/h	2.25 kW	6 kg
8 kg/h	3 kW	8 kg
12 kg/h	3 kW	12 kg
16 kg/h	3 kW	16 kg
20 kg/h	3 kW	20 kg

   [1)] Older Omega 4kg/h units are equipped with a single 3kW heating element. For these devices, the power per stage must be set to 3 kW.

   - Set the power per stage according to the table value.
     (Path: Engineering > SPA Control Board > System Mode > Power per Stage)
   - Set the capacity according to the table value.
     (Path: Engineering > Steam Generator > Tank Settings > Capacity)
8. Determine supply water type and cartridge size:
   - Determine the supply water type ("Tap Water", "RO" or "Filter Cartridge") and the carbonate hardness of the supply water (only if water supply type is set to " Tap Water" or "Filter Cartridge")
     (Path: Service > Steam Generator > Water Supply > Type)
   - Determine cartridge size (only if water supply type is set to "Filter Cartridge")
     (Path: Service > Steam Generator > Filter Cartridge > Cartridge Size)
9. Set current date and time of day:
   (Path: User > General)
   - Set date
   - Set time of day

6.1.4 Configuration procedure for Caldarium application

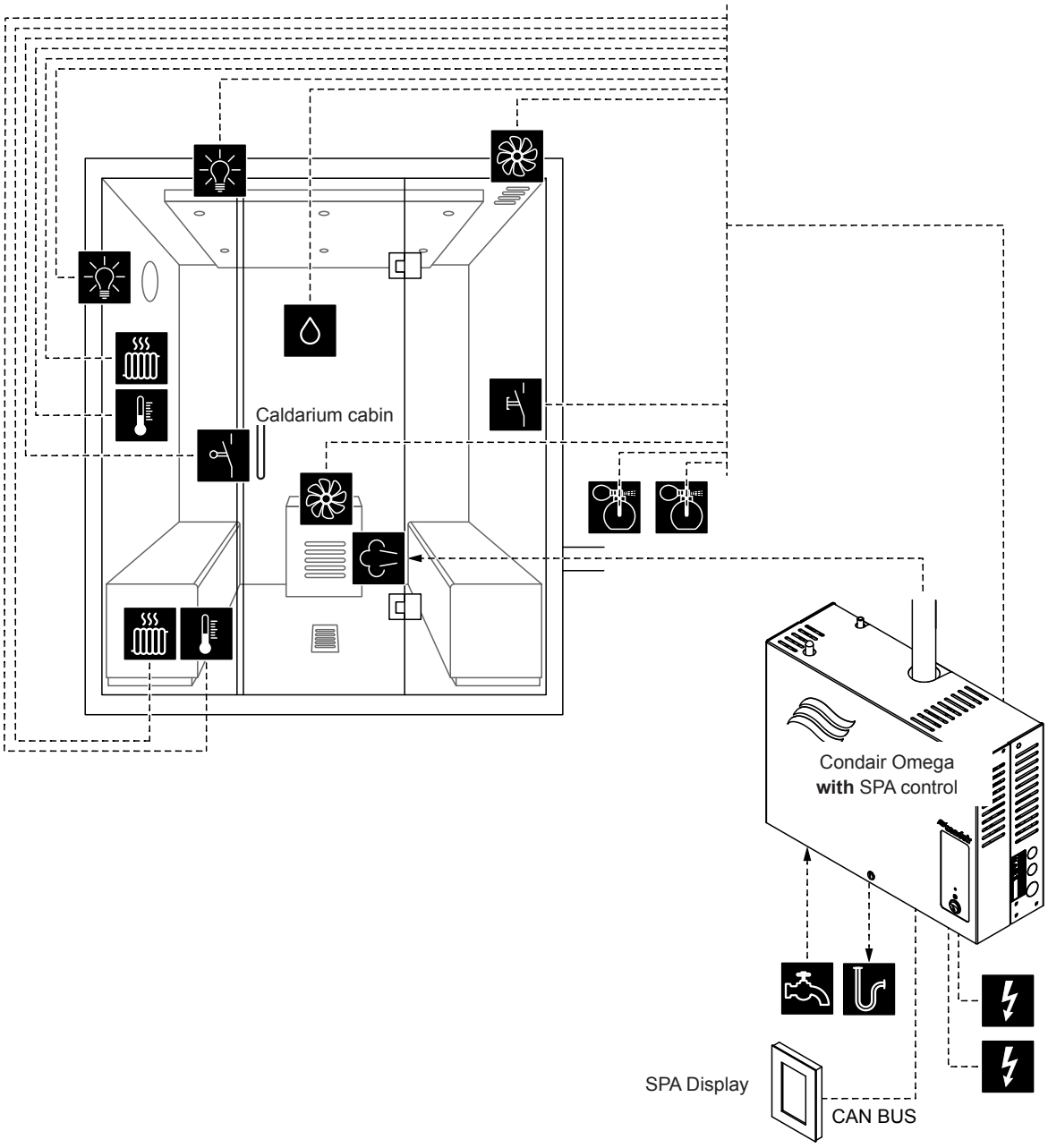

Fig. 12: Condair Omega with SPA Control and equippment for Caldarium application

Configuration procedure for Caldarium application:

1. Reset SPA Control to factory settings.
   (Path: Engineering > SPA Control Board > Factory Reset)
2. **Important**: This step must be carried out only with single cabin application:
   Reset SPA Display to factory settings.
   (Path: Engineering > Admin > Display > Factory Reset)
3. Set cabin type to "**Caldarium**".
   (Path: Engineering > SPA Control Board > Cabin Kind > Caldarium)
4. Determine humidity control settings:
   (Path: Engineering > Control Settings > Humidity Control)
   - Determine the humidity sensor signal type ("0 - 5V", "1 - 5V", "0 - 10V", "2 - 10V", "0 - 20V", "0 - 16V", "3 - 16V", "0 - 20mA", "4 - 20mA", "On/Off" or "0 - 4V")

5. Determine accessory control:
   (Path: Engineering > Accessories)
   - Determine the control of Light 1 and Light 2
   - Determine the control of the fragrance pump 1 (Aroma 1) and fragrance pump 2 (Aroma 2)
   - Determine the fan control (for single stage fans 1 and 2 or three-stage fan 1)
   - Determine the control of relay 8 and 9 (Path: Engineering > Accessories > Outputs)
     – "Relay 8 Mode": Set to "Bench Heater" to activate the bench heating
     – "Relay 8 Mode": Set to "Wall Heater" to activate the wall heating
6. Determine temperature control settings for the bench heating:
   (Path: Engineering > Control Settings > Bench Temp. Control)
   - Select temperature sensor type ("PT100", "PT1000 (0.1mA)", "PT1000 (1.0mA)", "KTY (1.0mA)")
   - Set the critical temperature in °C/°F above which a warning appears.
7. Determine temperature control settings for the wall heating:
   (Path: Engineering > Control Settings > Wall Temp. Control)
   - Select temperature sensor type ("PT100", "PT1000 (0.1mA)", "PT1000 (1.0mA)", "KTY (1.0mA)")
   - Set the critical temperature in °C/°F above which a warning appears.
8. Determine unit size:
   - Read the unit size on the type plate of the Condair Omega and read out the corresponding values from the following table.

Unit size	Power per stage	Capacity
2 kg/h	1.5 kW	2 kg
4 kg/h [1)]	1.5 kW	4 kg
6 kg/h	2.25 kW	6 kg
8 kg/h	3 kW	8 kg
12 kg/h	3 kW	12 kg
16 kg/h	3 kW	16 kg
20 kg/h	3 kW	20 kg

   [1)] Older Omega 4kg/h units are equipped with a single 3kW heating element. For these devices, the power per stage must be set to 3 kW.

   - Set the power per stage according to the table value.
     (Path: Engineering > SPA Control Board > System Mode > Power per Stage)
   - Set the capacity according to the table value.
     (Path: Engineering > Steam Generator > Tank Settings > Capacity)
9. Determine supply water type and cartridge size:
   - Determine the supply water type ("Tap Water", "RO" or "Filter Cartridge") and the carbonate hardness of the supply water (only if water supply type is set to " Tap Water" or "Filter Cartridge")
     (Path: Service > Steam Generator > Water Supply > Type)
   - Determine cartridge size (only if water supply type is set to "Filter Cartridge")
     (Path: Service > Steam Generator > Filter Cartridge > Cartridge Size)
10. Set current date and time of day:
    (Path: User > General)
    - Set date
    - Set time of day

6.1.5 Configuration procedure for Rasul application

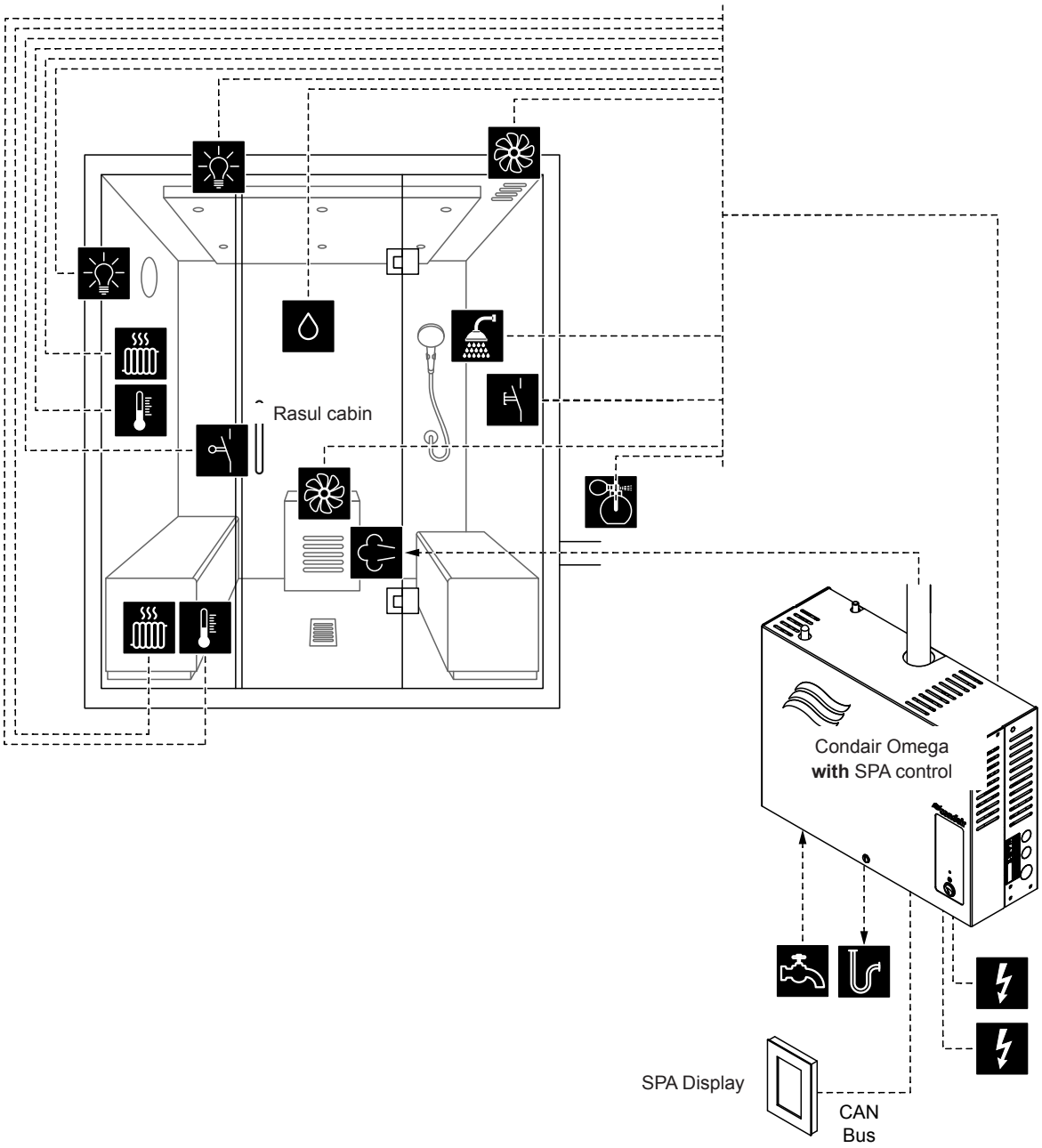

Fig. 13: Condair Omega with SPA Control and equippment for Rasul application

Configuration procedure for Rasul application:

1. Reset SPA Control to factory settings.
   (Path: Engineering > SPA Control Board > Factory Reset)
2. **Important**: This step must be carried out only with single cabin application:
   Reset SPA Display to factory settings.
   (Path: Engineering > Admin > Display > Factory Reset)
3. Set cabin type to "**Rasul**".
   (Path: Engineering > SPA Control Board > Cabin Kind > Rasul)

4. Set the treatment mode for Rasul operation ("Off" or "Keep Warm")
   (Path: Engineering > Control Settings > Treatment Mode)

   Note: Further notes on the treatment mode can be found in *chapter 6.3*)

5. Determine humidity control settings:
   (Path: Engineering > Control Settings > Humidity Control)
   - Determine the humidity sensor signal type ("0 - 5V", "1 - 5V", "0 - 10V", "2 - 10V", "0 - 20V", "0 - 16V", "3 - 16V", "0 - 20mA", "4 - 20mA", "On/Off" or "0 - 4V")

6. Determine accessory control:
   (Path: Engineering > Accessories)
   - Determine the control of Light 1 and Light 2
   - Determine the control of fragrance pump 1 (Aroma 1) and shower valve (Aroma 2)
   - Determine the fan control (for single stage fans 1 and 2 or three-stage fan 1)
   - Determine the control of relay 8 and 9 (Path: Engineering > Accessories > Outputs)
     – "Relay 8 Mode": Set to "Bench Heater" to activate the bench heating
     – "Relay 8 Mode": Set to "Wall Heater" to activate the wall heating

7. Determine temperature control settings for the bench heating:
   (Path: Engineering > Control Settings > Bench Temp. Control)
   - Select temperature sensor type ("PT100", "PT1000 (0.1mA)", "PT1000 (1.0mA)", "KTY (1.0mA)")
   - Set the critical temperature in °C/°F above which a warning appears.

8 Determine temperature control settings for the wall heating:
   (Path: Engineering > Control Settings > Wall Temp. Control)
   - Select temperature sensor type ("PT100", "PT1000 (0.1mA)", "PT1000 (1.0mA)", "KTY (1.0mA)")
   - Set the critical temperature in °C/°F above which a warning appears.

9. Determine unit size:
   - Read the unit size on the type plate of the Condair Omega and read out the corresponding values from the following table.

Unit size	Power per stage	Capacity
2 kg/h	1.5 kW	2 kg
4 kg/h [1)]	1.5 kW	4 kg
6 kg/h	2.25 kW	6 kg
8 kg/h	3 kW	8 kg
12 kg/h	3 kW	12 kg
16 kg/h	3 kW	16 kg
20 kg/h	3 kW	20 kg

   [1)] Older Omega 4kg/h units are equipped with a single 3kW heating element. For these devices, the power per stage must be set to 3 kW.

   - Set the power per stage according to the table value.
     (Path: Engineering > SPA Control Board > System Mode > Power per Stage)
   - Set the capacity according to the table value.
     (Path: Engineering > Steam Generator > Tank Settings > Capacity)

10. Determine supply water type and cartridge size:
    - Determine the supply water type ("Tap Water", "RO" or "Filter Cartridge") and the carbonate hardness of the supply water (only if water supply type is set to " Tap Water" or "Filter Cartridge")
      (Path: Service > Steam Generator > Water Supply > Type)
    - Determine cartridge size (only if water supply type is set to "Filter Cartridge")
      (Path: Service > Steam Generator > Filter Cartridge > Cartridge Size)

11. Set current date and time of day:
    (Path: User > General)
    - Set date
    - Set time of day

6.1.6 Configuration procedure for Bio sauna application

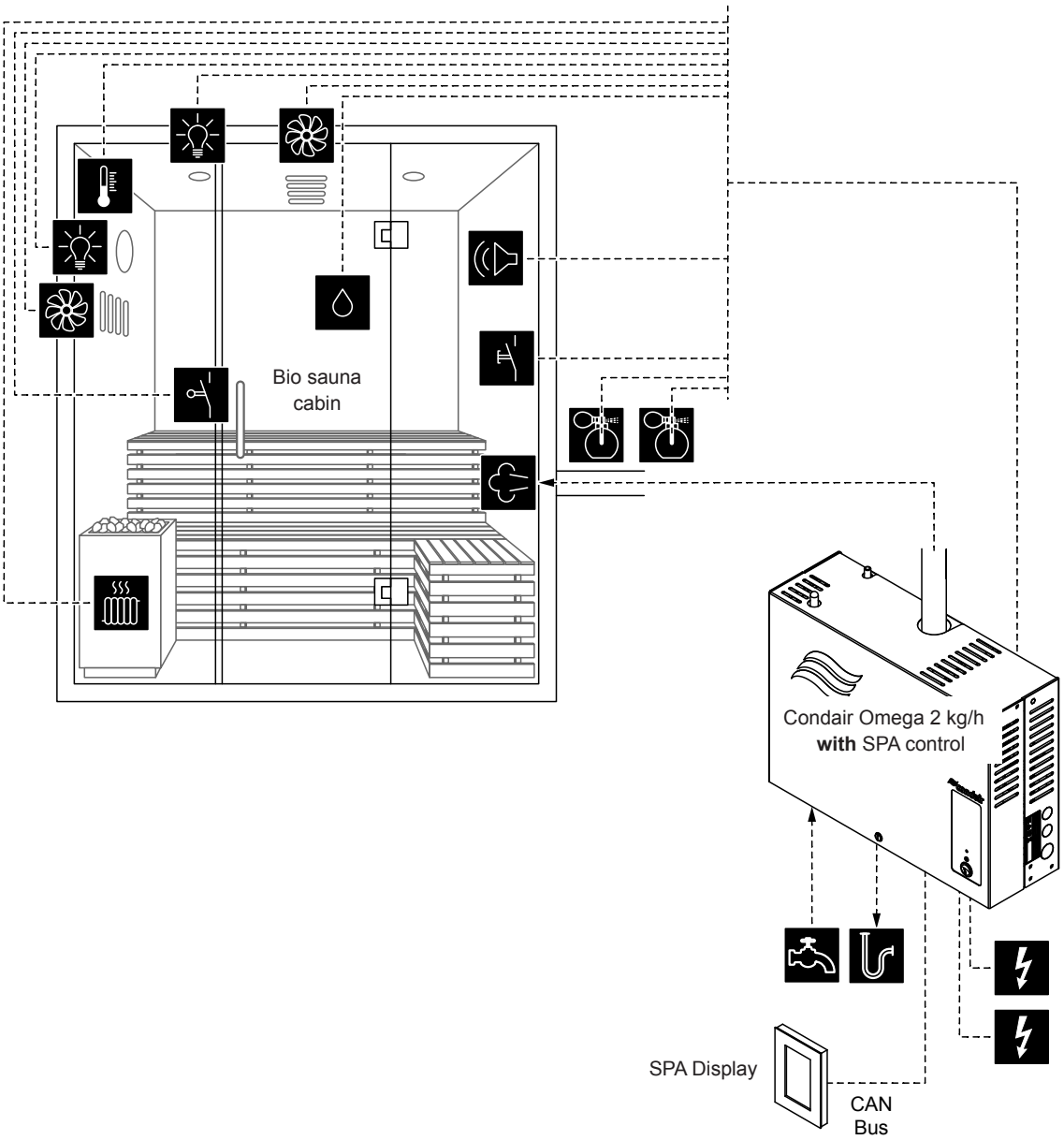

Fig. 14: Condair Omega 2 kg/h with SPA control and equippment for Bio sauna application

Configuration procedure for Bio sauna application:

1. Reset SPA Control to factory settings.
   (Path: Engineering > SPA Control Board > Factory Reset)
2. **Important**: This step must be carried out only with single cabin application:
   Reset SPA Display to factory settings.
   (Path: Engineering > Admin > Display > Factory Reset)
3. Set cabin type to "**Bio Sauna**".
   (Path: Engineering > SPA Control Board > Cabin Kind > Bio Sauna)
4. Set steam generator type to "**Internal Omega**" for using the Condair Omega 2 kg/h with SPA control:
   (Path: Engineering > SPA Control Board > Generator Kind)

5. Set heating type of the sauna heater to "**Internal**" (power supply and control of the heater is established via the Condair Omega).
   (Path: Engineering > Sauna Heater > Heat Kind > Internal)
6. Determine the power consumption of the sauna heater (observe the instructions of the heater manufacturer).
   (Path: Engineering > Sauna Heater > Heater > Heat Power)
7. Determine control settings:
   - Temperature control settings (Path: Engineering > Control Settings > Temperature Control)
     - Select temperature sensor type ("PT100", "PT1000 (0.1mA)", "PT1000 (1.0mA)", "KTY (1.0mA)")
     - Set the critical temperature in °C/°F above which a warning appears
   - Humidity control settings (Path: Engineering > Control Settings > Humidity Control)
     - Determine the humidity sensor signal type ("0 - 5V", "1 - 5V", "0 - 10V", "2 - 10V", "0 - 20V", "0 - 16V", "3 - 16V", "0 - 20mA", "4 - 20mA", "On/Off" or "0 - 4V")
8. Determine accessory control:
   (Path: Engineering > Accessories)
   - Determine the control of Light 1 and Light 2
   - Determine the control of the fragrance pump 1 (Aroma 1) and fragrance pump 2 (Aroma 2)
   - Determine the fan control (for single stage fans 1 and 2 or three-stage fan 1)
   - Determine the control of relay 8 and 9 (Path: Engineering > Accessories > Outputs)
9. Determine unit size:
   - Read the unit size on the type plate of the Condair Omega and read out the corresponding values from the following table.

Unit size	Power per stage	Capacity
2 kg/h	1.5 kW	2 kg
4 kg/h [1)]	1.5 kW	4 kg
6 kg/h	2.25 kW	6 kg
8 kg/h	3 kW	8 kg
12 kg/h	3 kW	12 kg
16 kg/h	3 kW	16 kg
20 kg/h	3 kW	20 kg

   [1)] Older Omega 4kg/h units are equipped with a single 3kW heating element. For these devices, the power per stage must be set to 3 kW.

   - Set the power per stage according to the table value.
     (Path: Engineering > SPA Control Board > System Mode > Power per Stage)
   - Set the capacity according to the table value.
     (Path: Engineering > Steam Generator > Tank Settings > Capacity)
10. Determine the type of supply water and cartridge size:
    - Determine the supply water type ("Tap Water", "RO" or "Filter Cartridge") and the carbonate hardness of the supply water (only if water supply type is set to " Tap Water" or "Filter Cartridge")
      (Path: Service > Steam Generator > Water Supply > Type)
    - Determine cartridge size
      (Path: Service > Steam Generator > Filter Cartridge > Cartridge Size)
11. Set current date and time of day:
    (Path: User > General)
    - Set date
    - Set time of day

6.1.7 Configuration procedure for dual cabin applications for small cabins

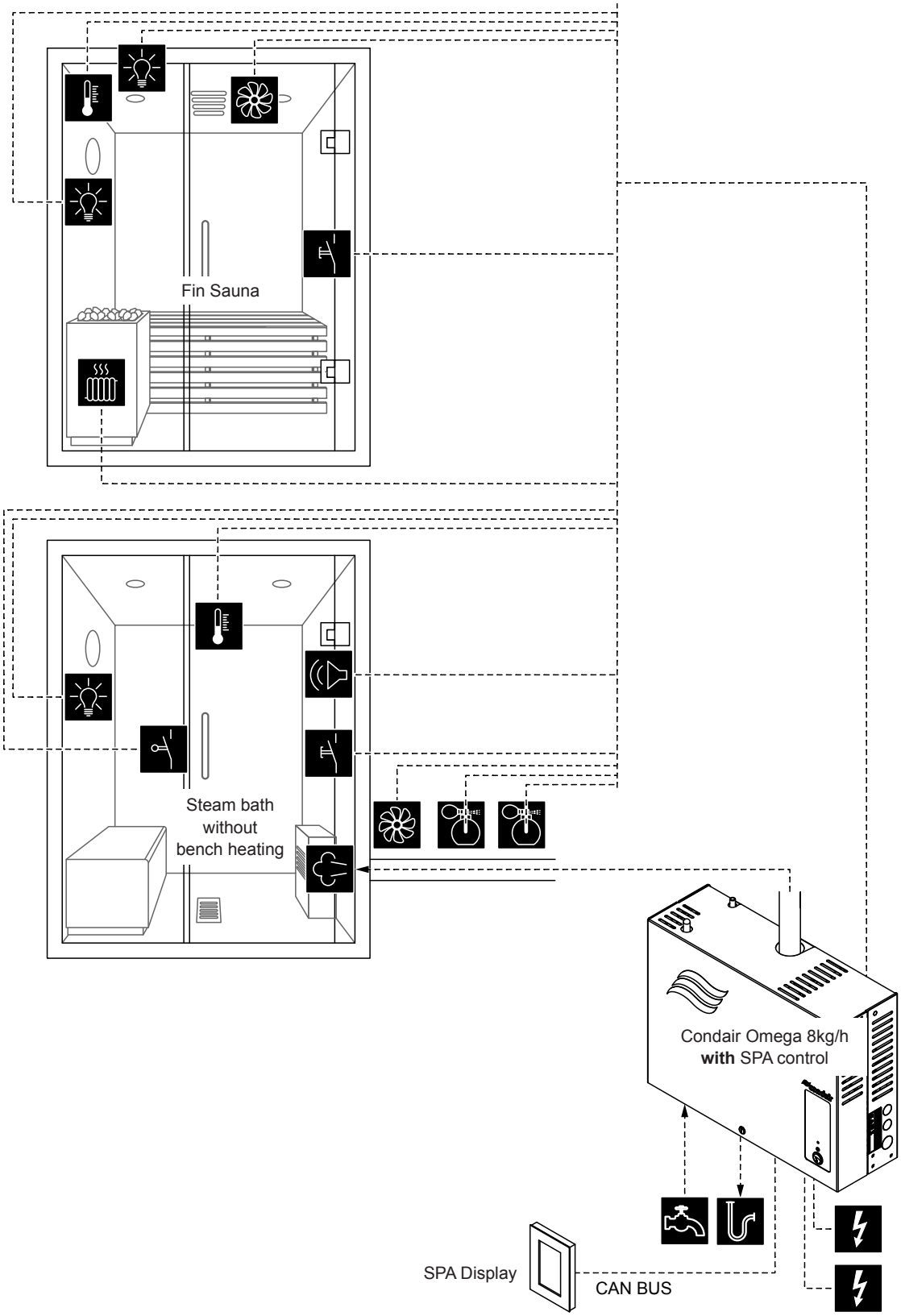

Fig. 15: Condair Omega 8kg/h with SPA control for dual cabin applications for small cabins (Fin sauna and steam bath without bench heating)

Configuration procedure for dual cabin applications for small cabins:

1. Reset SPA Control to factory settings.
   (Path: Engineering > SPA Control Board > Factory Reset)
2. Reset SPA Display to factory settings.
   (Path: Engineering > Admin > Display > Factory Reset)
3. Set the menu control for small dual cabins as follows:
   - Cabin 1: "Enable" to "On", Server ID to "0", SubIndex to "0"
     (Path: Engineering > Menu Tree > Cabin 1)
   - Cabin 2: "Enable" to "On", Server ID to "0", SubIndex to "1"
     (Path: Engineering > Menu Tree > Cabin 2)

   Note: The server ID can be set with the rotary switch "SW1" on the SPA/Omega control board (see Condair Omega or Condair Delta SPA Control Box installation manual).
4. Set system mode to "**Wellness Dual**".
   (Path: Engineering > SPA Control Board > System Mode > Wellness Dual)
5. Set cabin type to "**Steam Ba**th" .
   (Path: Engineering > SPA Control Board > Cabin Kind > Steam Bath)
6. Determine temperature control settings for the steam bath:
   (Path: Engineering > Control Settings > Temperature Control)
   - Select temperature sensor type ("PT100", "PT1000 (0.1mA)", "PT1000 (1.0mA)", "KTY (1.0mA)")
   - Set the critical temperature in °C/°F above which a warning appears
7. Determine accessory control:
   (Path: Engineering > Accessories)
   - Determine the control of Light 1 and Light 2
     Note: Light 1 can be used either for the steam bath cabin or for the sauna cabin. Make sure that this output is configured only for one of the two cabins. Light 2, however, can be independently configured for each cabin individually. For light 2 for the sauna room the relay output 8 is used.
   - Determine the control of the fragrance pump 1 (Aroma 1) and fragrance pump 2 (Aroma 2)
   - Determine the fan control (for single stage fan 1)
   - Determine the control of relay 9 (Path: Engineering > Accessories > Outputs)
     Note: The relay 9 can be used either for the steam bath cabin or for the sauna cabin. Make sure that this output is configured only for one of the two cabins.
8. Determine unit size:
   - Read the unit size on the type plate of the Condair Omega and read out the corresponding values from the following table.

Unit size	Power per stage	Capacity
2 kg/h	1.5 kW	2 kg
4 kg/h [1)]	1.5 kW	4 kg
6 kg/h	2.25 kW	6 kg
8 kg/h	3 kW	8 kg
12 kg/h	3 kW	12 kg
16 kg/h	3 kW	16 kg
20 kg/h	3 kW	20 kg

   [1)] Older Omega 4kg/h units are equipped with a single 3kW heating element. For these devices, the power per stage must be set to 3 kW.

   - Set the power per stage according to the table value.
     (Path: Engineering > SPA Control Board > System Mode > Power per Stage)
   - Set the capacity according to the table value.
     (Path: Engineering > Steam Generator > Tank Settings > Capacity)

9. Determine supply water type and cartridge size:
   - Determine the supply water type ("Tap Water", "RO" or "Filter Cartridge") and the carbonate hardness of the supply water (only if water supply type is set to " Tap Water" or "Filter Cartridge") (Path: Service > Steam Generator > Water Supply > Type)
   - Determine cartridge size (only if water supply type is set to "Filter Cartridge") (Path: Service > Steam Generator > Filter Cartridge > Cartridge Size)
10. Press <Home> button. In the Home screen switch to "Fin Sauna" application.
11. Set cabin type to "**Fin Sauna**".
    (Path: Engineering > SPA Control Board > Cabin Kind > Fin Sauna)
12. Set heating type of the sauna heater to "**Internal**" (power supply and control of the heater is established via the Condair Delta SPA Control Box) or "**External Analog**" (heater is externally powered, control of the heater is established via an analog signal from the Condair Delta SPA Control Box).
    (Path: Engineering > Sauna Heater > Heat Kind > Internal/External Analog)
13. Determine the power consumption of the sauna heater (observe the instructions of the heater manufacturer).
    (Path: Engineering > Sauna Heater > Heater > Heat Output)
14. Determine the temperature control settings for the Fin Sauna:
    (Path: Engineering > Control Settings > Temperature Control)
    - Select temperature sensor type ("PT100", "PT1000 (0.1mA)", "PT1000 (1.0mA)", "KTY (1.0mA)")
    - Set the critical temperature in °C/°F above which a warning appears
15. Determine accessory control:
    (Path: Engineering > Accessories)
    - Determine the control of Light 1 and Light 2
      Note: Light 1 can be used either for the steam bath cabin or for the sauna cabin. Make sure that this output is configured only for one of the two cabins. The light 2, however, can be independently configured for each cabin individually. For light 2 for the sauna room the relay output 8 is used.
    - Determine the fan control (for single stage fan 2)
    - Determine the control of relay 9 (Path: Engineering > Accessories > Outputs)
      Note: The relay 9 can be used either for the steam bath cabin or for the sauna cabin. Make sure that this output is configured only for one of the two cabins.
16. Set current date and time of day:
    (Path: User > General)
    - Set date
    - Set time of day

6.1.8 Configuration procedure for dual cabin applications for medium size cabins

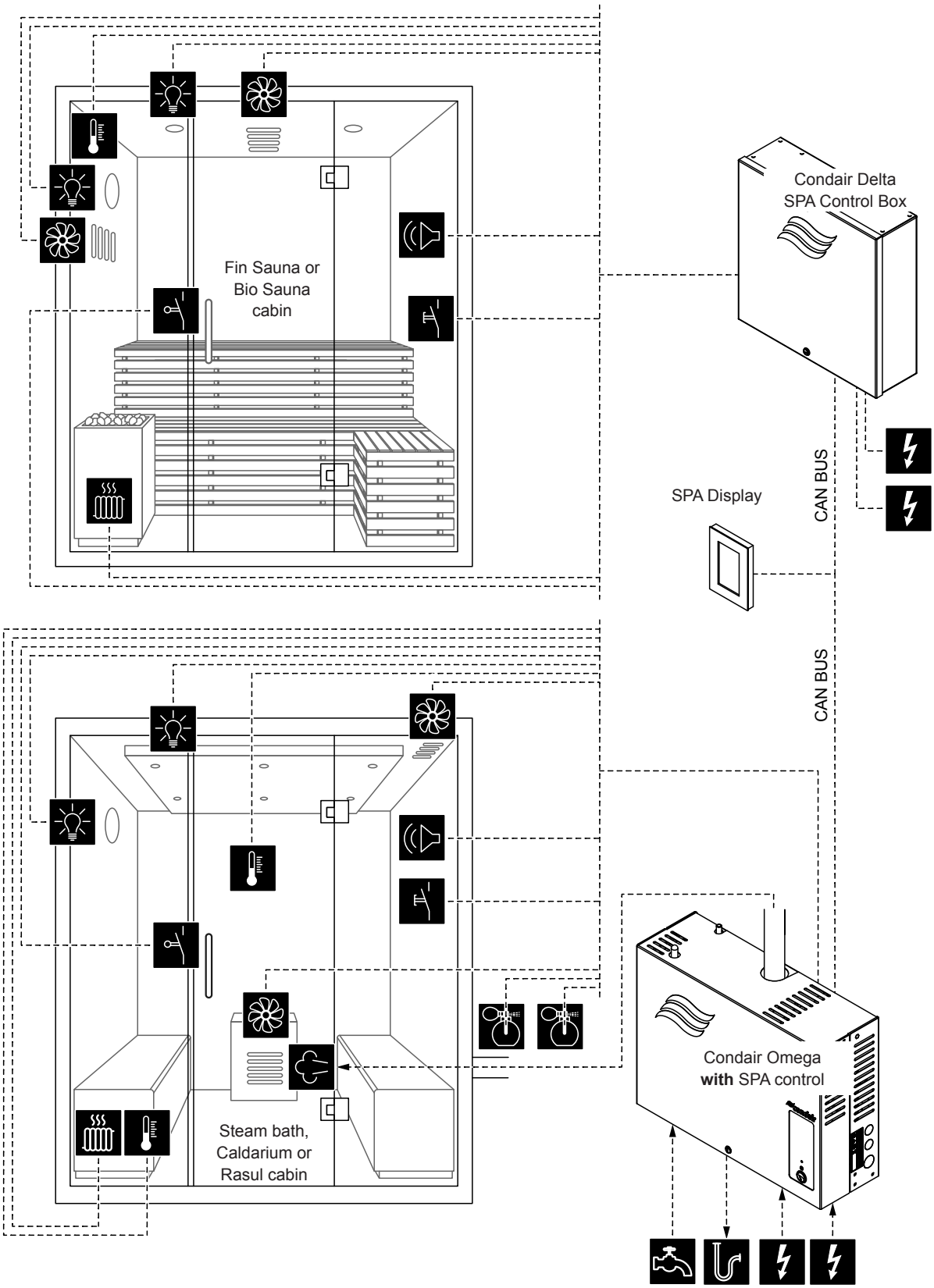

Fig. 16: Condair Delta SPA Control Box with Condair Omega with SPA Control Board for dual cabin applications for medium size cabins

Configuration procedure for dual cabin applications for medium size cabins:

1. Reset SPA Display to factory settings.
   (Path: Engineering > Admin > Display > Factory Reset)
2. The menu control for the Condair Delta SPA Control Box and the Condair Omega must be set as follows:
   - Cabin 1: "Enable" to "On" and Server ID to "0", SubIndex to "0"
     (Path: Engineering > Menu Tree > Cabin 1)
   - Cabin 2: "Enable" to "On" and Server ID to "1", SubIndex to "0"
     (Path: Engineering > Menu Tree > Cabin 2)

     If **one** Condair Omega steam generator is used, set the following settings:
     - Steam Generator 1: Set "Enable" to "On" and set the Server ID to set ID of the Condair Omega.
       (Path: Engineering > Menu Tree > Steam Generator 1)

     If **two** Condair Omega steam generators are used, set the following settings:
     - Steam Generator 1: Set "Enable" to "On" and set the Server ID to set ID of the **first** Condair Omega.
       (Path: Engineering > Menu Tree > Steam Generator 1)
     - Steam Generator 2: Set "Enable" to "On" and set the Server ID to set ID of the **second** Condair Omega.
       (Path: Engineering > Menu Tree > Steam Generator 2)

     If **no** Condair Omega steam generator is used, set the following settings:
     - Steam Generator 1: "Enable" to "Off"
       (Path: Engineering > Menu Tree > Steam Generator 1)

   Note: The server ID can be set with the rotary switch "SW1" on the SPA/Omega control board (see Condair Omega or Condair Delta SPA Control Box installation manual).
2. Continue with the configuration of the two SPA applications for the dual cabin application as described in the corresponding chapters for the configuration of the individual SPA applications (see *chapter 6.1.1* to *chapter 6.1.5*).
   Note: You can switch between the individual cabins (or SPA applications) by pressing the SPA application field on the home screen.

6.1.9 Configuration of several SPA displays

If more than one SPA display is used, each SPA display must have assigned a unique display Server ID ("Server ID Display").
(Path: Engineering > Admin > Display > Server ID Display)

Since the SPA displays are connected in series to the CAN BUS, make sure when assigning the Display Server ID that the SPA displays are numbered consecutively in the order of their connection to the CAN BUS. Give each newly added SPA display a new server ID (ID 8 ... 15, ex factory the Display Server ID is set to 8). This ensures that not several displays on the CAN BUS have the same server ID.

6.2 Settings in the "Service" menu

Accessing the "Service" menu

- Press the <Menu> button on the top right corner of the display. Then, enter the password "0000" (if main menu is configured with password protection). The main menu appears.
  Note: The password for the user menu can be modified in the "Engineering > Administration > Password" submenu.
- Select menu item "Service" in the main menu.
- Enter the password ("3562") in the password entry window that appears and confirm. Then, the "Service" menu appears.

Note: The content of the "Service" menu depends on the selected SPA application. The following description of the settings lists all available parameters of the "Service" menu.

Setting parameters Menu "Service"

Error List	Shows the list with the current warning and error messages.
Error History	Shows a list of the last 50 warning and error messages.
Measurement	
Temperature	Currently measured cabin temperature in °C/°F for temperature controlled steam shower application, Steam bath application, Bio sauna application and Fin sauna application.
Humidity	Currently measured cabin humidity in %rF for Caldarium application, Rasul application and Bio sauna application.
Bench Temp.	Currently measured bench temperature in °C/°F for steam bath application with optional bench heating, Caldarium application and Rasul application. **Note**: This menu item only appears if the mode of relay 8 or relay 9 in the "Engineering" menu is set to "Bench heating".
Wall Temp.	Currently measured wall temperature in °C/°F for Caldarium application and Rasul application. **Note**: This menu item only appears if the mode of relay 8 or relay 9 in the "Engineering" menu is set to "Wall heating".
Oven Temp.	Currently measured sauna heater temperature in °C/°F for Fin sauna application. Note: This menu item only appears if cabin type is set to Fin sauna and the sauna heater temperature measurement function is switched on in the "Engineering" menu.
SPA State	Current status of the cabin ("Off", "Warm Up", "Bathing", "Drying", "Keep Warm" or "Stop").
Sauna Heater **Note**: This menu only appears for Fin sauna application and Bio sauna application if the heating type of the sauna heater is set to "Internal" or "External Analog" in the "Engineering> Sauna Heater" menu.	
Hardware	Hardware information of the heating channels – Sw. Cycles 1: Number of switching cycles of heating channel No. 1 – Sw. Cycles 2: Number of switching cycles of heating channel No. 2 – Sw. Cycles 3: Number of switching cycles of heating channel No. 3 – Replace HW 1: Theoretical remaining switching cycles of heating channel No. 1 – Replace HW 2: Theoretical remaining switching cycles of heating channel No. 2 – Replace HW 3: Theoretical remaining switching cycles of heating channel No. 3 – Op. Hours HW 1: Current operating hours of the heating channel No. 1 – Op. Hours HW 2: Current operating hours of the heating channel No. 2 – Op. Hours HW 3: Current operating hours of the heating channel No. 3
Steam Generator **Note**: This menu only appears for steam shower application, steam bath application, Caldarium application, Rasul application and Bio sauna application, if the steam generator type is set to "Internal Omega", "Internal Reservoir" "External Omega" or "External Analog" in the menu "Engineering > SPA Control Board > Generator Kind".	
Error List	Shows the list with the current warning and error messages of the Condair Omega steam generator
Error History	Shows a list of the last 50 warning and error messages of the Condair Omega steam generator

Water Supply	Water supply settings for the Condair Omega.
	– Type: Determining the water supply type
	  – Tap Water
	  – RO (Reverse Osmosis Water)
	  – Filter Cartridge
	– Carbonate hardness: Setting the carbonate hardness of the supply water in °dH.
	  Note: This menu item appears only if the supply water type is set to "Tap Water" or "Filter Cartridge".

Device Service	View and reset the service values of the Condair Omega. – Service Done: Resetting the maintenance counter after maintenance has been carried out. – Heat Count: Shows the operating hours extrapolated to 100% steam output – Next Service: Remaining time in hours until the next maintenance is due.

Filter Cartridge	Display, set and reset of the filter cartridge service values.
	– Cartridge Size: Determining the size of the filter cartridge used.
	  – Small
	  – Large
	– Cartridge Replaced: Resetting the maintenance counter after replacing the filter cartridge.
	– Water Count: Shows the water consumption in liters.
	– Replace in: Remaining water consumption in liters until the next replacement of the filter cartridge is due.

Hardware	Hardware information of the heating channels.
	– **Hardware**:
	  – Sw. Cycles 1: Number of switching cycles of heating channel No. 1
	  – Sw. Cycles 2: Number of switching cycles of heating channel No. 2
	  – Sw. Cycles 3: Number of switching cycles of heating channel No. 3
	  – Sw. Cycles 4: Number of switching cycles of heating channel No. 4
	  – Sw. Cycles 5: Number of switching cycles of heating channel No. 5
	  – Replace HW 1: Theoretical remaining switching cycles of heating channel No. 1
	  – Replace HW 2: Theoretical remaining switching cycles of heating channel No. 2
	  – Replace HW 3: Theoretical remaining switching cycles of heating channel No. 3
	  – Replace HW 4: Theoretical remaining switching cycles of heating channel No. 4
	  – Replace HW 5: Theoretical remaining switching cycles of heating channel No. 5
	  – Op. Hours HW 1: Current operating hours of the heating channel No. 1
	  – Op. Hours HW 2: Current operating hours of the heating channel No. 2
	  – Op. Hours HW 3: Current operating hours of the heating channel No. 3
	  – Op. Hours HW 4: Current operating hours of the heating channel No. 4
	  – Op. Hours HW 5: Current operating hours of the heating channel No. 5

Draining	Draining the steam tank drain.
Device test	– Level Test: Performing a functional test of the level unit.
Restart	Restart device software

6.3 Settings in the "Engineering" menu

Accessing the menu "Engineering"

- Press the <Menu> button on the top right corner of the display. Then, enter the password "0000" (if main menu is configured with password protection). The main menu appears.
  Note: The password for the user menu can be modified in the "Engineering > Administration > Password" submenu.
- Select menu item "Engineering" in the main menu.
- Enter the password ("1055") in the password entry window that appears and confirm. Then, the "Engineering" menu appears.

Note: The content of the "Engineering" menu depends on the selected SPA application. The following description of the settings lists all available parameters of the "Engineering" menu.

Setting parameters Menu "Engineering"

SPA Control Board **Note**: This menu appears only on the Condair Delta SPA Control Box and on the Condair Omega with SPA Control.	
System Mode	Determining in which system mode the SPA Control Board should run. – Steam Generator: Setting for the operation of the Condair Omega with Omega Control as a pure steam generator for steam shower application. The steam production is controlled by a demand signal from an external controller. **CAUTION!** With this setting bathing time is not monitored. Make sure that the external control monitors the maximum allowed bathing time! – Wellness: Setting for single cabin application. The control takes place in accordance with the application via the device-specific control of the Condair Delta SPA Control Box or the Condair Omega. – Wellness Dual: Setting for dual cabin application for small cabins. The control of the two cabins takes place in accordance with the application via the device-specific controls of the Condair Delta SPA Control Box or the Condair Omega with SPA Control. – HVAC: Setting for HVAC applications.
Cabin Kind	Determining of the SPA application – Steam shower **Note**: Steam shower application for the Condair Omega with Omega Control. The steam production is either temperature controlled or with constant steam operation. The following SPA applications appear only on the Condair Delta SPA Control Box and on the Condair Omega with SPA Control. – Steam Bath – Caldarium – Rasul – Bio Sauna – Fin sauna
Generator Kind	Determining of the type of steam generation used for steam shower, steam Bath, Rasul or Bio sauna application – None: There is no steam generator used. – Internal Omega: The steam is produced by a Condair Omega with SPA Control. – Internal Reservoir: The steam is produced by a water reservoir integrated in the sauna heater of the Bio Sauna. – External Omega: The steam is produced by a Condair Omega with Omega Control. – External Analog: The steam is produced by an external steam generator, which is controlled by a demand signal.
Signaling	Activation ("On") or deactivation ("Off") of the beeper for fault/warning signalisation.
Stage Control	Setting the Eco mode for steam/heat production. – Eco Mode: Activation ("On") or deactivation ("Off") of the Eco mode. Eco operation ensures that not more than 9 kW (3 kW per phase) steam output (heat output) or sauna output is consumed. This is important for Bio sauna applications, which have an additional water reservoir connected to the 9 kW sauna power. If the Eco mode is activated, the power of the sauna heater will be reduced to 6 kW as soon as the water reservoir is switched on.

Modbus Settings	Setting the Modbus parameters.
	– Protocessor:
	  – Slave Address: Determining the slave address of the Protocessor.
	  – Baudrate: Determining of the baud rate (4800, 9600, 19200, 38400, 57600, 115200)
	  – Parity: Determining of the parity (none, 1 stop bit; none, 2 stop bit; odd, 1 stop bit; even, 1 stop bit)
	  – Data Format: Determining of the byte order (ABCD: big edian; BADC: big, swap; CDAB: little, swap; DCBA: little, endi.)
	– Gateway:
	  – Slave Address: Determining the slave address of the Gateway.
	  – Baudrate: Determining of the baud rate (4800, 9600, 19200, 38400, 57600, 115200)
	  – Parity: Determining of the parity (none, 1 stop bit; none, 2 stop bit; odd, 1 stop bit; even, 1 stop bit)
	  – Data Format: Determining of the byte order (ABCD: big edian; BADC: big, swap; CDAB: little, swap; DCBA: little, endi.)
	Note: Detailed notes on Modbus communication can be found in the Modbus addendum manual.

Error History Reset	Reset the list of the 50 most recent warning and error messages from the SPA control electronics.
Factory Reset	Resetting SPA Control Board settings to factory defaults.
File System Reset	Resetting the internal file system. Note: The file system must be reset only if it does not function correctly anymore. Resetting the file system may take several minutes (up to 5 minutes). Leave the device switched on and wait until everything is working properly again.
Control Settings	
Steam Mode	Determining of the steam control for the steam shower application. **Note**: This menu appears only for steam shower application. – Const. Steam: The steam generator works with constant steam production ("High", "Mid", "Low") – Temp. Control: The steam production is temperature controlled
Treatment Mode	Determining of the treatment type for Rasul application. For the treatment phase, the operation can be set to either no steam ("Off") or light steam ("Keep Warm"). If the option is set to "Keep Warm", the cabin humidity is controlled during the treatment phase to the desired keep warm temperature (setting under menu "Keep Warm"). **Note**: This menu item appears only for Rasul application.
Temperature Control	Determining of the temperature control parameters. **Note**: This menu appears only for steam shower application, steam bath application, Fin sauna application and Bio sauna application. – Temperature Sensor: Determining of the used temperature sensor (PT100, PT1000 (0.1 mA), PT1000 (1.0 mA), KTY (1.0 mA), KTY (0.1 mA)) – Max Temp. Setpoint: Determining the maximum adjustable temperature setpoint – Control Mode: Determining of the temperature control mode (On/Off control, PID control) – PID Type: Determining of the control type (Off, P, PI or PID). – PID P-Band: Determining of the proportional range in °C/°F for the P, PI or PID controller. – PID I-Time: Determining of the integral time in seconds for the PI or PID controller. – PID D-Time: Determining of the differential time in seconds for the PID controller. – Temperature Hysteresis: Determining of the temperature hysteresis for On/Off control. – Critical: Determining of the critical temperature in °C/°F above which the steam production/heating is interrupted and a warning is displayed. – Instab. Mode: Activation ("On") or deactivation ("Off") of the instable temperature measurement monitoring. – Instable Delta: Determining of the temperature deviation within the specified time ("Instable Time") which triggers an fault message if exceeded. – Instable Time: Determining of the time within the specified temperature deviation ("Instable Delta") must detected, that an fault message is triggered. – Instable Lock Time: Determining of the time in seconds how long the temperature monitoring is deactivated after the an unstable temperature has been detected. – Temperature Offset: Determining of the offset value in °C/°F to compensate measurement deviations. – Aroma Pre Run Temp.: Determining how many °C earlier an fragrance injection should take place before the temperature setpoint is reached (Factory setting 5 °C).

Humidity Control	Determining of the humidity control parameters **Note**: This menu appears only for Caldarium application, Rasul application and Bio sauna application. – Humidity Sensor Type: Determining of the control signal of the used humidity sensor (0-5V, 1-5V, 0-10V, 2-10V, 0-20V, 0-16V, 3-16V, 0-20mA, 4-20mA or On/Off) – Max Hum. Setpoint: Determining the maximum adjustable humidity setpoint – Control Mode: Determining of the humidity control mode (On/Off control, PID control) – PID Type: Determining of the control type (Off, P, PI or PID). – PID P-Band: Determining of the proportional range in %rF for the P, PI or PID controller. – PID I-Time: Determining of the integral time in seconds for the PI or PID controller. – PID D-Time: Determining of the differential time in seconds for the PID controller. – Humidity Hysteresis: Determining of the humidity hysteresis for On/Off control. – Humidity Offset: Determining of the offset value in %rh to compensate measurement deviations. – Aroma Pre Run Humidity: Determining how many %rh earlier an fragrance injection should take place before the humidity setpoint is reached (Factory setting: 10 %rh).
Steam Blast	Determining of the parameters for the steam blast function Note: This menu only appears if cabin type steam bath, Caldarium, Rasul or Bio sauna has been selected. – Mode: Switching On/Off the steam blast function. The following parameters only appear if the steam blast function is activated ("Mode" is set to "On"). If the steam blast function is activated, relay 8 or relay 9 can be used to control a display of an active steam blast. For this purpose, the "Steam Blast" option must be selected in the "Engineering > Accessories > Outputs" menu. – Duration: Determining of the duration of the steam blast in minutes. – Request: Determining of the intensity of the steam blast in % of the total steam output.
Bench Temp. Control	Determining of the temperature control parameters for the bench heating. **Note**: This menu only appears if the mode of relay 8 or relay 9 in the menu "Engineering> Accessories> Outputs" is set to "Bench Heating". – Temperature Sensor: Determining of the used temperature sensor for monitoring the bench heating (PT100, PT1000 (0.1 mA), PT1000 (1.0 mA), KTY (1.0 mA), KTY (0.1 mA)) – Temperature Hysteresis: Determining of the temperature hysteresis in °C/°F for the activation and deactivation of the bench heating. – Critical: Determining of the critical temperature in °C/°F above which the bench heating is deactivated and a fault message is displayed. – Temperature Offset: Determining of the offset value in °C/°F to compensate measurement deviations.
Wall Temp. Control	Determining of the temperature control parameters for the wall heating. **Note**: This menu only appears if the mode of relay 8 or relay 9 in the menu "Engineering> Accessories> Outputs" is set to "Wall Heating". – Temperature Sensor: Determining of the used temperature sensor for monitoring the wall heating (PT100, PT1000 (0.1 mA), PT1000 (1.0 mA), KTY (1.0 mA), KTY (0.1 mA)) – Temperature Hysteresis: Determining of the temperature hysteresis in °C/°F for the activation and deactivation of the wall heating. – Critical: Determining of the critical temperature in °C/°F above which the wall heating is deactivated and a fault message is displayed. – Temperature Offset: Determining of the offset value in °C/°F to compensate measurement deviations.

<table>
<tr><td>Safety</td><td>Determining of the safety parameters for the bathing operation
– Day Timer: Lock ("Locked") or unlock ("Unlocked") the day timer.
– Week Timer: Lock ("Locked") or unlock ("Unlocked") the week timer.
CAUTION! For Fin sauna/Bio sauna, the timer functions may only be used if the sauna heater is equipped with a approved safety system (such as cover protection) to avoid switching the sauna heater on in an unsafe condition (e.g. towel on sauna heater)!
– Max. Door Open Time: Determining of the maximum door open time, if elapsed the operation stops and a warning is displayed.
Note: The door contact can also be used as a load shedding device to interrupt the heating current. If the "Max Door Open Time" is set to "0", the heating is stopped as soon as the contact is opened and restarted as soon as it is closed.
– Door Open Delay: Determining of the delay after which a warning is displayed when the door is open.
– Door Observ. Mode: Activation ("On") or deactivation ("Off") of the door observation mode for cabins without physical door contact.
– Door Observ. Time: Determining of the time within which the cabin temperature must increase at least 5°C otherwise the control software interprets this as an open door and triggers W14 and stops the steam production.
– Door Query: Activation ("On") or deactivation ("Off") of the door query. If the door query is activated, confirmation that the cabin door is closed must be given before starting a bathing session.
– Session Timeout: Determining of the maximum duration of the bathing operation.
CAUTION! The maximum bathing time is set ex factory to 6 h. Make sure that the prescribed maximum bathing times for Fin saunas and Bio saunas are complied with!
<table><tr><td>Public SPA systems</td><td>—</td></tr><tr><td>Appliances for use in apartment buildings, hotels or similar locations</td><td>12 h</td></tr><tr><td>SPA systems for private use</td><td>6 h</td></tr></table>If the maximum bathing time is exceeded, the device goes into fault condition (E165) and must be restarted.
– Post Runtime: Determining of the follow-up time after bathing operation in seconds.
Note: During the follow-up time, the steam/heating demand on the system is retained and will not be reset before the run-on time has elapsed.
– Enthalpy Observ.: Determining whether enthalpy monitoring is carried out in accordance with EN60335-2 for correct use ("Standard") or incorrect use ("Tolerant").
– Safetychain: Indicates whether the safety circuit is closed ("On") or open ("Off").
– Cabin Overtemp.: Indicates whether the cabin overtemperature switch is closed ("On") or has triggered ("Off").</td></tr>
<tr><td>Oven Temperature</td><td>Determining of the temperature control parameters for the sauna heater temperature sensor.
Note: This menu only appears if cabin type "Fin sauna" or "Bio sauna" has been selected.
– Oven Temp. Mode: Switching the optional sauna heater temperature sensor On/Off.
The following parameters only appear if "Oven Temp. Mode" is set to "On".
– Temp. Sensor: Determining of the used temperature sensor for monitoring the sauna heater temperature (PT100, PT1000 (0.1 mA), PT1000 (1.0 mA), KTY (1.0 mA), KTY (0.1mA))
– Temperature Hysteresis: Determining of the temperature hysteresis in °C/°F for switching the sauna heater on and off.
– Critical: Determining of the critical temperature in °C/°F above which the sauna heater is deactivated and a fault message is displayed.
– Temperature Offset: Determining of the offset value in °C/°F to compensate measurement deviations.</td></tr>
</table>

Keep Warm	Determining of the keep warm functions. The keep-warm functions serve to keep the cabin temperature, seat temperature, etc. in standby mode at a certain value, so that the operating temperatures are reached faster in the bathing operation. Note: For steam shower application, not the cabin temperature but the water in the steam tank is kept warm. As a result, steam can be produced in steam shower applications in the shortest possible time, provided that the water has already been heated once. – Keep Warm Mode: Determining of the control of the keep warm operation ("Off": Keep warm functions deactivated, "Always": The keep warm functions are always activated, "Day Timer": The keep warm functions are started at a certain time of the day, "Lead Time": The keep warm function is started a certain time before the set start time of the timer). – Keep Warm Start: Determining of the starting time (time of day) at which the keep warm functions are started with timer controlled activation of the keep warm functions. – Keep Warm Duration: Determining of the maximum running time of the keep warm functions in hours. – Keep Warm Lead Time: Determining of the lead time in minutes the keep warm function start before the set timer start time. **Note**: This setting is used to bring the system up to a warm-up temperature before a timer start time so that the warm-up temperature has already been reached at the timer start time. Depending on the cabin size, this value may be adjusted. – Temperature: Determining of the target keep warm temperature of the cabin in °C/°F. – Humidity: Determining of the target keep warm humidity of the cabin in %. – Bench Temp.: Determining of the target keep warm temperature in °C/°F for the bench heating. – Wall Temp.: Determining of the target keep warm temperature in °C/°F for the wall heating.
Start/Stop Settings	Determining of the Start / Stop settings for bathing operation. – Start Input Type: Determining whether the start impulse is initiated via a button ("Button") or a switch ("Switch"). – Stop Option: Activation ("On") or deactivation ("Off") of the manual stop function (via key <Start/Stop>, external button, web interface, etc.). **Note**: If you deactivate the "Stop Option", a ongoing bathing session can not be stopped manually.
Accessories	
Light 1	Determining of the settings for controlling Light 1. – Light Working Mode: Determining whether Light 1 is switched on and off manually ("Manual") or automatically by the SPA Control ("Auto") or whether the control of Light 1 is deactivated ("Off"). – Light Post Run: Determining of the time in minutes Light 1 should remain switched on with automatic control after bathing operation has ended. – Light On States: Determining in which operating conditions Light 1 should be switched on. Several operating states can be selected ("Off": When the unit is ready, "Keep Warm": During the keep warm phase, "Warm Up": During the Warm-up phase:, "Bathing": During the bathing operation, "Drying": During the drying phase, "Stop": If the bathing operation was stopped by a fault). **Note**: With the Rasul application additional operating states can be selected ("Pre-Treatment": During the Warm-up phase: for the treatment, "Treatment": During the treatment phase, "Shower": During the showering phase). – Light On Mode: Determining whether Light 1 should burn permanently ("Fix") or be controlled in pulses ("Interval"). – Light On Interval: Determining of the Interval time in minutes for the interval control of the light. – Light On Impulse: Determining of the pulse length in seconds for turning on the light.

Light 2	Determining of the settings for controlling Light 2. – Light Working Mode: Determining whether Light 2 is switched on and off manually ("Manual") or automatically by the SPA Control ("Auto") or whether the control of Light 2 is deactivated ("Off"). – Light Post Run: Determining of the time in minutes Light 2 should remain switched on with automatic control after bathing operation has ended. – Light On States: Determining in which operating conditions Light 2 should be switched on. Several operating states can be selected ("Off": When the unit is ready, "Keep Warm": During the keep warm phase, "Warm Up": During the Warm-up phase:, "Bathing": During the bathing operation, "Drying": During the drying phase, "Stop": If the bathing operation was stopped by a fault). **Note**: With the Rasul application additional operating states can be selected ("Pre-Treatment": During the Warm-up phase: for the treatment, "Treatment": During the treatment phase, "Shower": During the showering phase). – Light On Mode: Determining whether Light 2 should burn permanently ("Fix") or be controlled in pulses ("Interval"). – Light On Interval: Determining of the Interval time in minutes for the interval control of the light. – Light On Impulse: Determining of the pulse length in seconds for turning on the light.
Aroma 1	Determining of the settings for controlling the fragrance pump 1. – Aroma Mode: Determining whether the fragrance injection is interval-controlled via the SPA Control ("Interval") or via an external control ("Extern") or whether the fragrance injection 1 is deactivated ("Off"). – Aroma Level: Determining of the intensity level for the fragrance injection (Level 1 to Level 5). – Aroma Interval Min.: Determining of the minimum interval time in minutes for fragrance injection. – Aroma Interval Max.: Determining of the maximum interval time in minutes for fragrance injection. – Aroma Impulse Min.: Determining of the minimum pulse length in seconds for fragrance injection. – Aroma Impulse Max.: Determining of the maximum pulse length in seconds for fragrance injection.
Aroma 2	Determining of the settings for controlling the fragrance pump 2. – Aroma Mode: Determining whether the fragrance injection is interval-controlled via the SPA Control ("Interval") or via an external control ("Extern") or whether the fragrance injection 2 is deactivated ("Off"). – Aroma Level: Determining of the intensity level for the fragrance injection (Level 2 to Level 5). – Aroma Interval Min.: Determining of the minimum interval time in minutes for fragrance injection. – Aroma Interval Max.: Determining of the maximum interval time in minutes for fragrance injection. – Aroma Impulse Min.: Determining of the minimum pulse length in seconds for fragrance injection. – Aroma Impulse Max.: Determining of the maximum pulse length in seconds for fragrance injection.

Fan	Determining of the settings for controlling the fans.
	– Fan Mode: Determining whether a single three-stage fan ("1 fan 3 Stages"), two single-stage fans ("2 fans 1-stage"), one single stage fan ("1 fan 1-stage") or no fan ("Off") is/are used.
	Note: For the three-stage fan, the appropriate voltages (24 VAC, 18 VAC, 15 VAC, 0 VAC) must be connected to the terminal block "X18" on the SPA control board. As the optional transformer is not available for the Condair Omega, this setting is not recommended for the Condair Omega.
	– Fan 1: Determining of the settings for fan 1
	  – Light Dependency: Determining whether fan 1 should be switched on and off depending on Light 1 ("as Light 1"), depending on Light 2 ("as Light 2") or independently of the light control.
	  – Bath Dependency: Determining whether the fan 1 should always run during the bath phase and shower phase ("On"), only if steam demand is present ("at Steam Request"), whether the fan operation should be controlled by a sensor ("Sensor Controlled") or whether the fan 1 is deactivated ("Off").
	  Note: If the fan is set to "Sensor Controlled", the fan will operate as follows:
	  – Single stage operation:
	  As soon as the measured temperature value or humidity value rises above the setpoint value + PID P-Band/2, the fan is switched on. The fan is switched off again as soon as the measured temperature value or humidity value drops below the setpoint value - PID P-Band/2.
	  – Three-stage operation:
	  Fan runs on stage 1: if measured temperature value or humidity value is below the setpoint value - PID P-Band/4.
	  Fan runs on stage 2: if measured temperature value or humidity value is between the setpoint value ± PID P-Band/4.
	  Fan runs on stage 3: if measured temperature value or humidity value is above the setpoint value + PID P-Band/4.
	  – Warm Up Time: Determining of the fan run time in minutes for the Warm-up phase.
	  – Dry Time: Determining of the fan run time in minutes for the drying phase.
	– Fan 2: Determining of the settings for fan 2
	  – Light Dependency: Determining whether fan 2 should be switched on and off depending on Light 1 ("as Light 1"), depending on Light 2 ("as Light 2") or independently of the light control.
	  – Bath Dependency: Determining whether the fan 2 should always run ("On"), only if steam demand is present ("at Steam Request"), whether the fan operation should be controlled by a sensor ("Sensor Controlled") or whether the fan 2 is deactivated ("Off").
	  Note: If the fan is set to "Sensor Controlled", the fan will operate as follows:
	  – Single stage operation:
	  As soon as the measured temperature value or humidity value rises above the setpoint value + PID P-Band/2, the fan is switched on. The fan is switched off again as soon as the measured temperature value or humidity value drops below the setpoint value - PID P-Band/2.
	  – Three-stage operation:
	  Fan runs on stage 1: if measured temperature value or humidity value is below the setpoint value - PID P-Band/4.
	  Fan runs on stage 2: if measured temperature value or humidity value is between the setpoint value ± PID P-Band/4.
	  Fan runs on stage 3: if measured temperature value or humidity value is above the setpoint value + PID P-Band/4.
	  – Warm Up Time: Determining of the fan run time in minutes for the Warm-up phase.
	  – Dry Time: Determining of the fan run time in minutes for the drying phase.

Outputs	Determining of the settings for controlling the additional relays 8 and 9.
	– Relay 8 Mode: Determining the operating mode of relay 8.
	  – "Off": Relay function deactivated.
	  – "Auto Status": Relay 8 is activated automatically dependent on the corresponding On states of relay 8.
	  – "Bench Heater": Relay 8 is used to control the bench heating.
	  – "Wall Heater": Relais 8 is used to control the wall heating.
	  – "Steam Blast": Relay 8 is used to indicate an active steam blast.
	  – "Signal 0-4V": Relay 8 interrupts the power supply to the humidity sensor of the bio sauna in fin sauna mode.
	– Relay 8 On States: Determining in which operating states relay 8 should be activated automatically. Several operating states can be selected ("Off": When the unit is ready, "Keep Warm": During the keep warm phase, "Warm Up": During the Warm-up phase:, "Bathing": During the bathing operation, "Drying": During the drying phase, "Stop": If the bathing operation was stopped by a fault).
	Note: With the Rasul application additional operating states can be selected ("Pre-Treatment": During the Warm-up phase: for the treatment, "Treatment": During the treatment phase, "Shower": During the showering phase).
	– Relay 9 Mode: Determining whether the additional relay 9 is activated automatically dependent on the corresponding states of relay 9 ("Auto Status") or whether the additional relay 9 should be used for the control of the bench heating ("bench heater"), the wall heating ("wall heater"), of the wall heating ("wall heater") or of a display indicating an active steam blast ("Steam Blast") or whether the additional relay 9 is deactivated ("Off").
	– Relay 9 Mode: Determining the operating mode of relay 9.
	  – "Off": Relay function deactivated.
	  – "Auto Status": Relay 9 is activated automatically dependent on the corresponding On states of relay 9.
	  – "Bench Heater": Relay 9 is used to control the bench heating.
	  – "Wall Heater": Relais 9 is used to control the wall heating.
	  – "Steam Blast": Relay 9 is used to indicate an active steam blast.
	  – "Signal 0-4V": Relay 9 interrupts the power supply to the humidity sensor of the bio sauna in fin sauna mode.
	– Relay 9 On States: Determining in which operating states relay 9 should be activated automatically. Several operating states can be selected ("Off": When the unit is ready, "Keep Warm": During the keep warm phase, "Warm Up": During the Warm-up phase:, "Bathing": During the bathing operation, "Drying": During the drying phase, "Stop": If the bathing operation was stopped by a fault).
	Note: With the Rasul application additional operating states can be selected ("Pre-Treatment": During the Warm-up phase: for the treatment, "Treatment": During the treatment phase, "Shower": During the showering phase).

Sauna Heater **Note**: This menu only appears for Fin sauna application and Bio sauna application if the heating type of the sauna heater is set to "Internal" or "External Analog".	
Heat Kind	Determining of the settings for controlling the sauna heater. – None: The control of the sauna heater takes place externally, not via about the SPA Control. – Internal: The power supply as well as the control of the sauna heater are provided by the SPA Control. – External Analog: An externally powered sauna heater is controlled via an analog signal from the SPA Control. Note: If the sauna is controlled via the heater type "Extern Analog", terminal X16 for the safety contactor is now also active. This means that the sauna heater can be controlled externally via solid state relays instead of the internal heating relays.
Heat Settings	Determining of the setting for the internal heating control of the sauna heater. – Heat Power: Determining of the heating power of the connected sauna heater (3 kW, 6 kW or 9 kW).
Heat Values	Display of the current heating values of the sauna heater. – Heat request: Current demand in % for the sauna heater. – Heat Output: Current heating output in % of the sauna heater.
Omega Control Board **Note**: This menu only appears for applications using a Condair Omega with Omega Control.	

System Mode	Determining in which system mode the **Omega Control Board** should run. – Steam Generator: Setting for the operation of the Condair Omega with Omega Control as a pure steam generator for steam shower application. The steam production is controlled by a demand signal from an external controller. **CAUTION!** With this setting bathing time is not monitored. Make sure that the external control monitors the maximum allowed bathing time! – Wellness: Setting for single cabin application. The control takes place in accordance with the application via the device-specific control of the Condair Delta SPA Control Box or the Condair Omega. – Wellness Dual: Setting for dual cabin application for small cabins. The control of the two cabins takes place in accordance with the application via the device-specific controls of the Condair Delta SPA Control Box or the Condair Omega with SPA Control. – HVAC: Setting for HVAC applications.
Generator Kind	Determining of the type of steam generation used for steam shower, steam Bath, Rasul or Bio sauna application – None: There is no steam generator used. – Internal Omega: The steam is produced by a Condair Omega with Omega Control.
Signaling	Activation ("On") or deactivation ("Off") of the beeper for fault/warning signalisation.

Modbus Settings	Setting the Modbus parameters.
	– Protocessor:
	  – Slave Address: Determining the slave address of the Protocessor.
	  – Baudrate: Determining of the baud rate (4800, 9600, 19200, 38400, 57600, 115200)
	  – Parity: Determining of the parity (none, 1 stop bit; none, 2 stop bit; odd, 1 stop bit; even, 1 stop bit)
	  – Data Format: Determining of the byte order (ABCD: big edian; BADC: big, swap; CDAB: little, swap; DCBA: little, endi.)
	– Gateway:
	  – Slave Address: Determining the slave address of the Gateway.
	  – Baudrate: Determining of the baud rate (4800, 9600, 19200, 38400, 57600, 115200)
	  – Parity: Determining of the parity (none, 1 stop bit; none, 2 stop bit; odd, 1 stop bit; even, 1 stop bit)
	  – Data Format: Determining of the byte order (ABCD: big edian; BADC: big, swap; CDAB: little, swap; DCBA: little, endi.)
	Note: Detailed notes on Modbus communication can be found in the Modbus addendum manual.

Error History Reset	Reset the list of the 50 most recent warning and error messages from the SPA control electronics.
Factory Reset	Resetting Omega Control Board settings to factory defaults.
File System Reset	Resetting the internal file system. Note: The file system must be reset only if it does not function correctly anymore. Resetting the file system may take several minutes (up to 5 minutes). Leave the device switched on and wait until everything is working properly again.
Steam Generator **Note**: This menu only appears only for steam shower application, steam bath application, Caldarium application, Rasul application and Bio Sauna application, if the steam generator type is set to "Internal Omega", "Internal Reservoir", "External Omega" or "External Analog"	
Steaming Settings	Determining of the steam settings for the steam generator – Control Source: If only one control board is available, the control is local ("Local"). If the steam generator is controlled by an external SPA Control Board, it is necessary to switch to remote control ("Remote"). In the case of a remote control, the server ID of the SPA Control Board must be specified under "Control Server ID". – Input signal: Determining of the type of demand signal for the steam generator (0-5V, 1-5V, 0-10V, 2-10V, 0-20V, 0-16V, 3-16V, 0-20mA, 4-20mA, On/Off or 0-4V). – Control Server ID: Server ID of the control board that controls the steam generator. – Control Mode: Determining of the control mode, Demand (ext. controller) or rH (int. humidity controller). Note: For wellness applications, this setting must be set to "Demand".
Steam Values	Display of current steam values. – Steam Request: Current steam demand in % for the steam generator. – Steam Quantity: Current steam output in % of the steam generator.
Level	Current water level in the water tank.
Tank Settings	Settings of the water tank. – Power per Stage: Setting the power of the heating elements: 1.5 kW, 2.25 kW or 3.0 kW – Capacity: Setting the device size 2 kg/h, 4 kg/h, 6 kg/h, 8 kg/h, 12 kg/h, 16 kg/h or 20 kg/h. – Size: The water tank size is automatically determined by the capacity.
Reservoir Settings	Settings of the water reservoir for a Bio sauna heater. – Capacity: Determining of the size of the water reservoir integrated in the Bio sauna heater.

Safety	Status indications of the safety elements of the steam generator. – Tank Overtemp.: Status display of the overtemperature sensor on the water tank. – Low Water: Status indication of the low water level sensor in the integrated water reservoir of the Bio sauna heater.
Admin	
Password	Determining a password for the user level (no password set ex factory).
Display	Determining of the settings for the SPA Display Software. – Server ID Display: Setting the server ID of the SPA display. – Calibrate: Performing a calibration of the SPA display. – Factory Reset: Resetting the display electronic settings to factory defaults. – File System Reset: Resetting the internal file system. Note: The file system of the SPA display must be reset only if a logo must be reset or if the file system does not function correctly anymore. Resetting the file system may take several minutes (up to 5 minutes). During resetting, it may be that the SPA display is not working properly and the SPA display turns white. In this case, leave the device switched on and wait (max. 5 minutes) until everything is working properly again.
System Parameters	Determining of the settings for importing and exporting data. – Export: Export of data to the internal file system ("SpaExportSettings.json"). – Import: Import of data from the internal file system ("SpaExportSettings.json").
Menu Tree	
Cabin 1	Determining whether the settings of Cabin 1 should be displayed on the SPA display. – Enable: Display enabled ("On") or disabled ("Off"). – Server ID: Determining of the CAN BUS ID of the SPA control board or the Omega control board. – Subindex: If the system mode is set to "Wellness Dual", subindexes must be assigned for the individual cabins.
Cabin 2	Determining whether the settings of Cabin 2 should be displayed on the SPA display. – Enable: Display enabled ("On") or disabled ("Off"). – Server ID: Determining of the CAN BUS ID of the SPA control board or the Omega control board. – Subindex: If the system mode is set to "Wellness Dual", subindexes must be assigned for the individual cabins.
Steam Generator 1	Determining whether the settings of the steam generator 1 should be displayed on the SPA display. – Enable: Display enabled ("On") or disabled ("Off"). – Server ID: Determining of the CAN BUS ID of the Condair Omega control board.
Steam Generator 2	Determining whether the settings of the steam generator 2 should be displayed on the SPA display. – Enable: Display enabled ("On") or disabled ("Off"). – Server ID: Determining of the CAN BUS ID of the Condair Omega control board.
Diagnostic	Determining which control boards should be displayed in diagnostic mode on the SPA display. – Server ID 0: Display enabled ("On") or disabled ("Off"). – Server ID 1: Display enabled ("On") or disabled ("Off"). – Server ID 2: Display enabled ("On") or disabled ("Off"). – Server ID 3: Display enabled ("On") or disabled ("Off"). – Server ID 4: Display enabled ("On") or disabled ("Off")). – Server ID 5: Display enabled ("On") or disabled ("Off"). – Server ID 6: Display enabled ("On") or disabled ("Off")). – Server ID 7: Display enabled ("On") or disabled ("Off").
IP Settings	
Host Name Suffix	Determining of the host name suffix.
DHCP Mode	Determining whether DHCP mode should be used ("On") or not ("Off").
IP Address	Determining of the static IP address of the Condair Omega or the Condair Delta SPA Control Box.
Subnet Mask	Determining of the subnet mask for IP communication.
Gateway	Determining of the Gateway IP address of the Condair Omega or the Condair Delta SPA Control Box.
DNS Primary	Determining of the IP Address of the primary domain name server (DNS). The IP address for the primary domain name server is used when DHCP mode is off.
DNS Secondary	Determining of the IP Address of the secondary domain name server (DNS). The IP address for the secondary domain name server is used when DHCP mode is off.
Diag. Board ID 0 .... Diag. Board ID 7 **Note**: Only the boards that were selected in the menu tree appear under Diagnostics.	

Output Sensor Setup	Diagnostics of the settings for the sensor inputs. – Demand Select: Switching between current and voltage measurement. – Humidity Select: Switching between current and voltage measurement. – Temp. Control: Switching between different sensor types. – Temp Gain: Switching the input gain of the temperature sensor. – Bench Temp. Control: Switching between different sensor types. – Bench Temp. Gain: Switching the input gain of the bench temperature sensor.
Output Relay	Diagnostics of the relay outputs. – Sec. Contactor: Switching the safety contactor on and off. – Inlet Valve: Switching the inlet valve of the Condair Omega on and off. – Relay Drain: Switching the relay of the drain pump of the Condair Omega on and off. – Relay Fan 1: Switching the relay of fan 1 on and off. – Relay Fan 2: Switching the relay of fan 2 on and off. – Relay 8: Switching the additional relay 8 on and off. – Relay 9: Switching the additional relay 9 on and off. – Relay Error: Switching the error relay on and off (Err Out). – Relay Light 1: Switching the relay of Light 1 on and off. – Relay Light 2: Switching the relay of Light 2 on and off. – Relay Pump 1: Switching the relay of Pump 1/Valve 1 on and off. – Relay Pump 2: Switching the relay of Pump 2 on and off.
Output Heat	Diagnostic of the heating circuits. – Heat 1: Switching the heating circuit 1 on and off. – Heat 2: Switching the heating circuit 2 on and off. – Heat 3: Switching the heating circuit 3 on and off. – Heat 4: Switching the heating circuit 4 on and off. – Heat 5: Switching the heating circuit 5 on and off.
Signaling	Turning the beeper on and off.
Output Analog	Diagnostic of the analog outputs. – Led Red: Control of the red LED of the Condair Omega (fault). – Led Green: Control of the green LED of the Condair Omega (steam production). – Demand: Control of the demand to the external steam generator. – Reserve: Control of the reserve output
Status Relay	Indication of the current state of the relay. – Status Valve: "On" (switched on), "Off" (switched off). – Status Sec Contactor: "On" (switched on), "Off" (switched off).
Status Heat	Indication of the current state of the heating circuits. – Heat 1: "On" (switched on), "Off" (switched off). – Heat 2: "On" (switched on), "Off" (switched off). – Heat 3: "On" (switched on), "Off" (switched off). – Heat 4: "On" (switched on), "Off" (switched off). – Heat 5: "On" (switched on), "Off" (switched off).
Input Digital	Indication of the current state of the digital inputs. – Cartridge Reset: "On" (reset button pressed), "Off" (reset button not pressed). – Cabin Overtemp.: "On" (no overtemperature), "Off" (overtemperature switch has triggered). – Low Water: "On" (water level OK), "Off" (water level too low). – Level 1: "On" (water level at level 1), "Off" (water level below level 1). – Level 2: "On" (water level at level 2), "Off" (water level below level 2). – Level 3: "On" (water level at level 3), "Off" (water level below level 3). – On/Off: "On" (On button pressed), "Off" (On button not pressed). – Door: "On" (cabin door closed), "Off" (cabin door open). – Light 1: "On" (Light 1 burns), "Off" (Light 1 off). – Light 2: "On" (Light 2 burns), "Off" (Light 2 off). – Tank Overtemp.: "On" (no overtemperature in the steam tank), "Off" (overtemperature switch for steam tank has triggered). – Hardware Option SPA Control: Shows he hardware option of the Condair Delta SPA Control Box or the Condair Omega.
Input Analog	Indication of the current state of the analog inputs. – 24 V Local: Current voltage of the internal 24 V power supply. – 5 V Local: Current voltage of the internal 5 V power supply. – 24 V Extern: Current voltage of the external 24 V power supply. – 5 V Extern: Current voltage of the external 5 V power supply. – Demand: Current voltage value of the demand signal. – Temperature: Actual voltage value of the temperature demand signal for the cabin. – Bench Temp.: Actual voltage value of the temperature demand signal of the bench heating. – Humidity: Current voltage value of the humidity demand signal for the cabin. – Reserve: Current voltage value of the reserve input.

7 Maintenance

7.1 Important notes on maintenance

Qualification of personnel

All maintenance work must be carried out only by well qualified and trained specialists authorised by the owner. It is the owner's responsibility to verify proper qualification of the personnel.

General note

The instructions and details for maintenance work must be followed and upheld.

Only the maintenance work described in this documentation may be carried out.

Only use original Condair spare parts to replace faulty parts.

Safety

Some maintenance work requires removal of the unit cover. Please note the following:

DANGER!
Danger of electric hazard!

You may get in touch with live parts when the steam generator is open. Touching live parts may cause severe injury or even lethal violation.

Prevention: Before carrying out any maintenance work set the Condair Omega out of operation as described in *chapter 4.6* (switch off the unit, disconnect it from the mains and stop the water supply) and secure the unit against inadvertent power-up.

CAUTION!

The electronic components inside the steam generator are very sensitive to electrostatic discharge.

Prevention: Before carrying out any maintenance work to the electrical or electronic equipment of the steam generator, appropriate measures must be taken to protect the respective components against damage caused by electrostatic discharge (ESD protection).

WARNING!
Danger of burning!

The water in the steam tank can be hot (up to 95 °C). There is danger of burning when the steam tank is dismounted shortly after steam has been produced.

Prevention: Before carrying out any work on the steam system set the Condair Omega out of operation as described in *chapter 4.6*, then wait until the components have cooled down sufficiently thus preventing danger of burning.

7.2 Maintenance intervals

To maintain operational safety the Condair Omega steam generator must be maintained at regular intervals. The control software of the Condair Omega features a maintenance counter for the unit maintenance of the steam generator and one for the Replacement of the filter cartridge (only active if system is configured for the operation with the optional filter cartridge). The maintenance counters for the unit maintenance or the replacement of the filter cartridge, respectively are determined at the initial commissioning based on the carbonate hardness of the supply water.

Maintenance intervals in hours for "unit maintenance"

The following table gives you an overview of the approximate interval times for the unit maintenance at 100 % steam output based on the carbonate hardness of the supply water and the unit size. When using RO water the maintenance interval time for the unit maintenance is set fixed to 2000 hours.

		Maintenance interval times "unit maintenance" in hours						
Supply water type	**Carbonate hardness [°dH] supply water**	**Omega Small**				**Omega Medium**		
		2	**4**	**6**	**8**	**12**	**16**	**20**
Tap water	1	2800	1400	1050	700	1167	875	700
	2	2520	1260	945	630	1050	788	630
	3	2280	1140	855	570	950	713	570
	4	2040	1020	765	510	850	638	510
	5	1840	920	690	460	767	575	460
	6	1640	820	615	410	683	513	410
	7	1480	740	555	370	617	463	370
	8	1320	660	495	330	550	413	330
	9	1160	580	435	290	483	363	290
	10	1040	520	390	260	433	325	260
	11	920	460	345	230	383	288	230
	12	800	400	300	200	333	250	200
	13	720	360	270	180	300	225	180
	14	640	320	240	160	267	200	160
	15	560	280	210	140	233	175	140
	16	480	240	180	120	200	150	120
	17	440	220	165	110	183	138	110
	18	400	200	150	100	167	125	100
	19	360	180	135	90	150	113	90
	20	320	160	120	80	133	100	80
	21	280	140	105	70	117	88	70
	22	240	120	90	60	100	75	60
	23	200	100	75	50	83	63	50
	24	160	80	60	40	67	50	40
	25	120	60	45	30	50	38	30
	>25	120	60	45	30	50	38	30
RO water	not configurable	2000						

Important! Independently whether the Condair Omega is operated with tap water, RO water or filter cartridge water the **unit maintenance is to be carried out at least once a year**.

Filter cartridge replacement intervals in litres

The following table gives you an overview of the approximate replacement intervals of the filter cartridge based on the specific output, the carbonate hardness of the supply water (tap water) and the size of the filter cartridge.

Carbonate hardness [°dH] supply water	Replacement interval in litres	
	Filter cartridge S	Filter cartridge L
1	4500	14000
2	2250	7000
3	1500	4667
4	1125	3500
5	900	2800
6	750	2333
7	643	2000
8	563	1750
9	500	1556
10	450	1400
11	409	1273
12	375	1167
13	346	1077
14	321	1000
15	300	933
16	281	875
17	265	824
18	250	778
19	237	737
20	225	700
21	214	667
22	205	636
23	196	609
24	188	583
25	180	560
26	173	538
27	167	519
28	161	500
29	155	483
30	150	467
31	145	452
32	141	438
33	136	424
34	132	412
35	129	400
36	125	389
37	122	378
38	118	368
39	115	359
40	113	350

If the corresponding maintenance counter has elapsed, the yellow LED above the unit switch and on units with optional SPA Display additional the yellow warning triangle in the upper left corner of the display indicate that a maintenance must be carried out. In the fault list "Warning 29" is shown if the unit maintenance must be carried out or "Warning 165" if the optional filter cartridge must be replaced. The steam generator Condair Omega continues normal operation.
Note: If a maintenance is due, the buzzer sounds at any time the unit is switched on and in regular intervals during operation. The buzzer sound can be deactivated in the "Engineering" menu of the web interface or the optional SPA Display.

Carry out the corresponding maintenance work, then reset the corresponding maintenance counter (see *chapter 7.8*).
Note: If during servicing a low or an increased calcification of the steam tank is determined, the maintenance interval time can increased (by reducing the carbonate hardness) or decreased (by increasing the carbonate hardness).

7.3 Maintenance list

Adjacent you can find an overview of the maintenance work to be carried out at the unit maintenance.

Components	**Work to be done**
Steam tank	Remove, disassemble and clean, replace defective components if necessary. Note: When operating the Condair Omega with the optional filter cartridge slight lime traces in the steam tank are normal. However, these slight lime traces must not be removed.
Steam tank receptacle	Inspect, clean if necessary.
Drain pump	Remove, disassemble and clean, replace if necessary.
Inlet valve	Remove and clean filter insert, replace if necessary.
Filling cup	Inspect, clean if necessary.
Level unit	Inspect, clean if necessary.
Drain	Inspect, clean if necessary.
Drain pipe and siphon	Inspect, clean if necessary (decalcify and rinse out).
Steam installation	Inspect steam and condensate hoses for cracks and ensure that they are correctly attached, replace defective hoses.
Water installation	Inspect water hoses in the unit for cracks and to see that they are correctly attached, replace defective hoses. Check supply pipe is tight, tighten it if necessary. Clean water filter, if available.
Electrical installation	Have all cables in the unit checked by an electrician that they are correctly fixed and that the insulation is not damaged
Heating elements	Check the resistance of the heating elements. Note: a heating element is defective and must be replaced, if the resistance value measured is >20 Ω.

7.4 Removing and installing components for maintenance

7.4.1 Preparing the Condair Omega for the removal of components

Before starting any removal work set the Condair Omega out of operation and drain the steam tank. Please refer to the notes in *chapter 4.6*.

7.4.2 Removal and installation of the steam tank

WARNING!
Danger of burning!

Before removal of the steam tank ensure the steam tank is empty and has cooled down, that no more burning danger exists.

DANGER!
Danger of electric hazard!

You may get in touch with live parts when the steam generator is open. Touching live parts may cause severe injury or even lethal violation.

Prevention: Before removal of the steam tank make sure the steam generator is separated from the mains (switch off electrical isolator in the mains supply line and check tensionless state with a voltage tester).

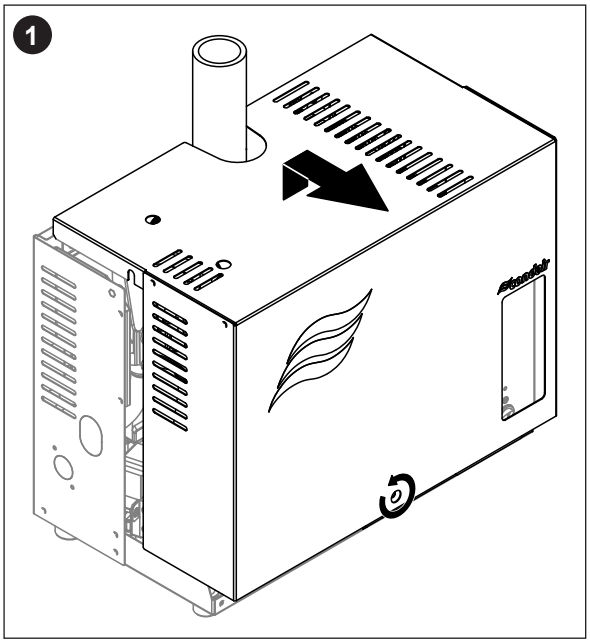

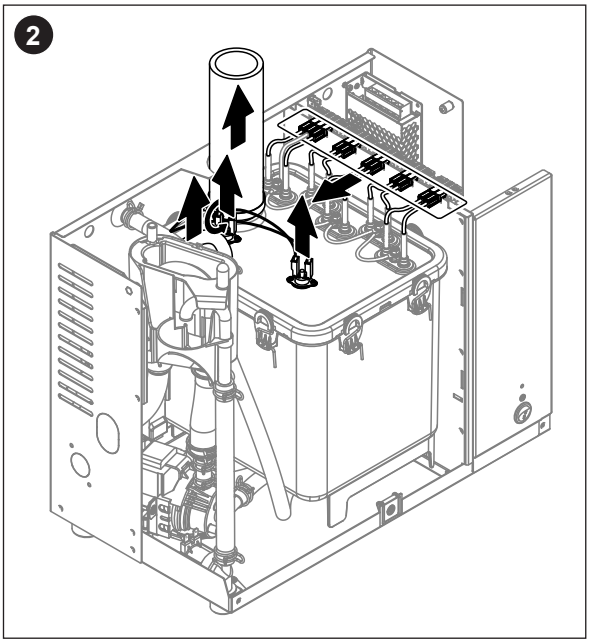

1. Loosen the retaining screw on the unit cover using a screwdriver, then remove the unit cover.
2. Free the hose clamp on the steam outlet connector using a screwdriver and remove steam hose from the steam connector. Release hose clamp of the pressure equalizing hose on top of the steam tank and remove hose from the connector. Unplug all heating cables from their sockets. Remove connecting cables from overtemperature switch(es).

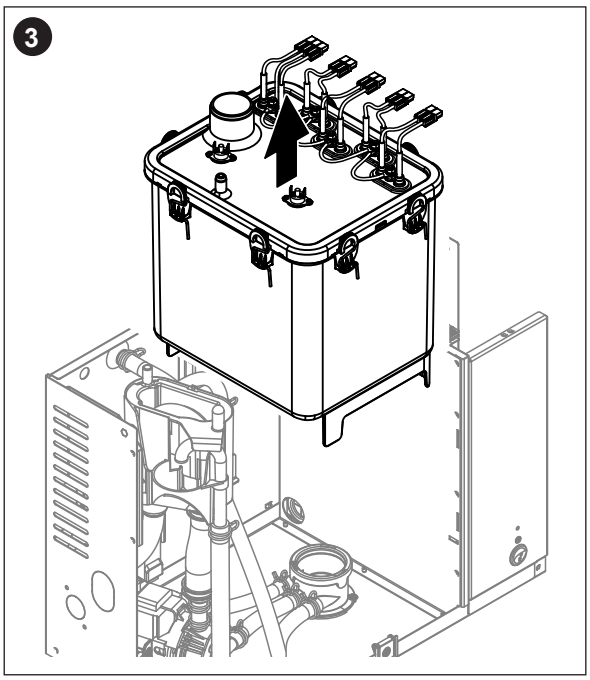

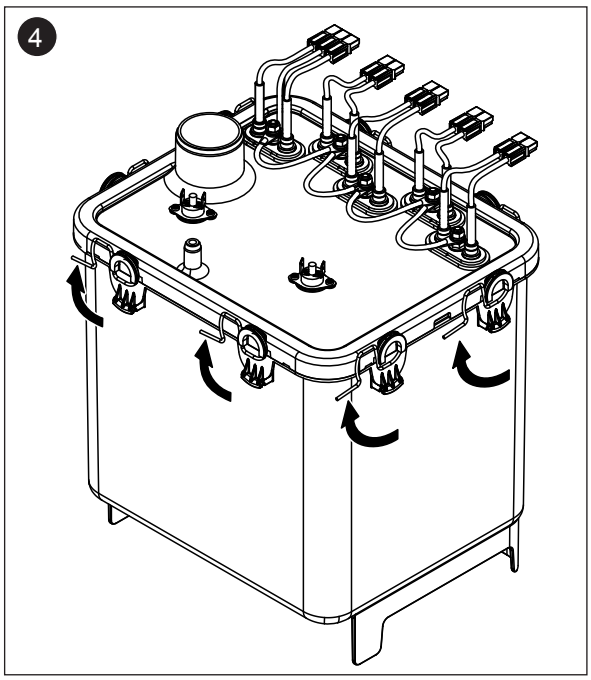

3. Carefully lift the steam tank out of steam tank receptacle and remove it towards the front of the steam generator.

CAUTION!

Set down the steam tank carefully to ensure the connector on the bottom side of the steam tank is not damaged!

4. Unlock all locking clamps on the steam tank cover.

5. Carefully lift off the steam tank cover with the heating elements, and remove cover sealing.

CAUTION!

Take care with the cover while it is removed, so as not to damage the heating elements.

6. Loosen the strainer insert and lift it out of the steam tank.

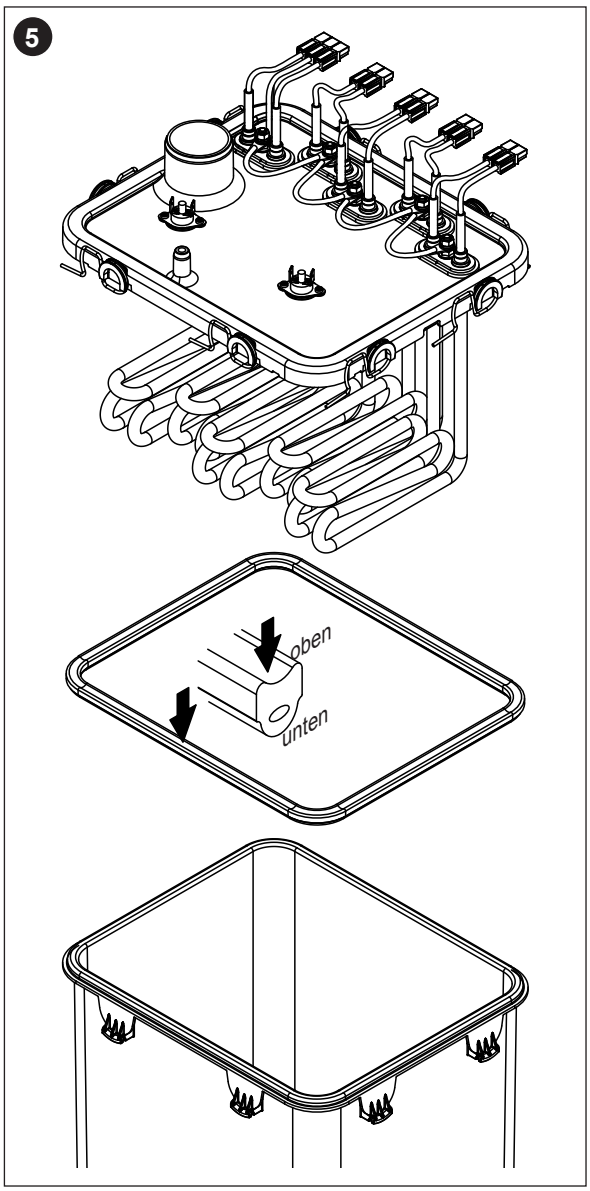

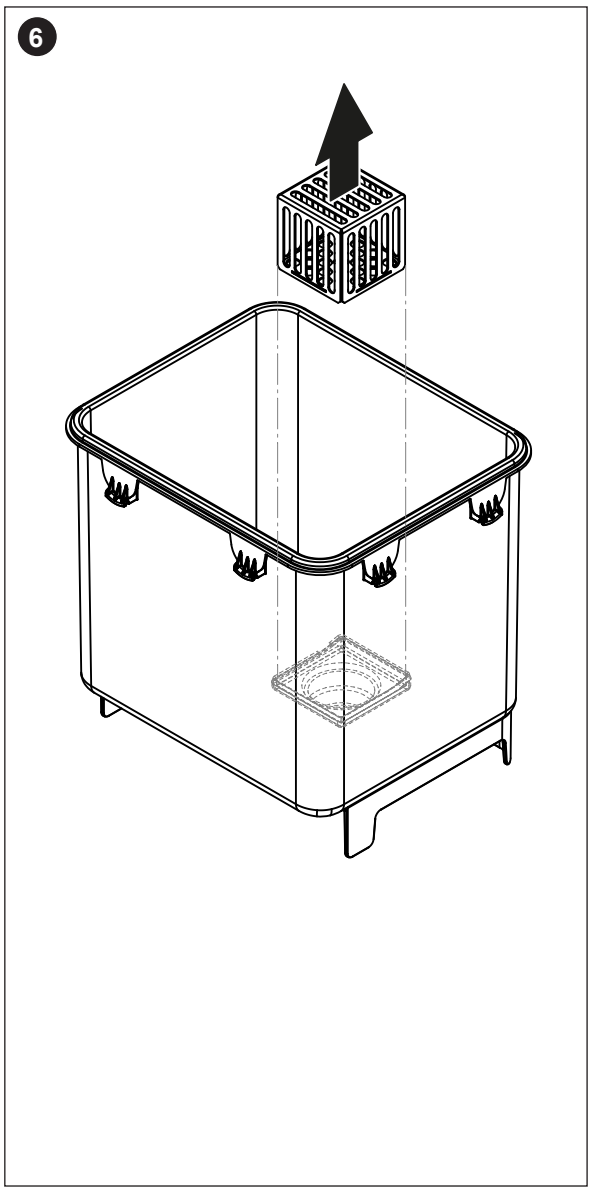

7. If during maintenance one or more heating elements must be replaced:
   - First note position of the connecting cables inside the heating cable sockets.
   - Cut cables on the heating cable connectors.
   - Undo the nuts on the fixing flange of the appropriate heating element and remove heating element.
   - Install new heating element with the shim from the below into the steam tank cover and fix it to cover with the flange, the gasket, and the toothed nut.
   - Connect the protective conductor cable according to the figure below to the heating element flange with the washer, the spring washer and the nut.
   - Push contact tongue of the heating cables into the heating cable plugs supplied until they are locked inside the plug (see figure below).

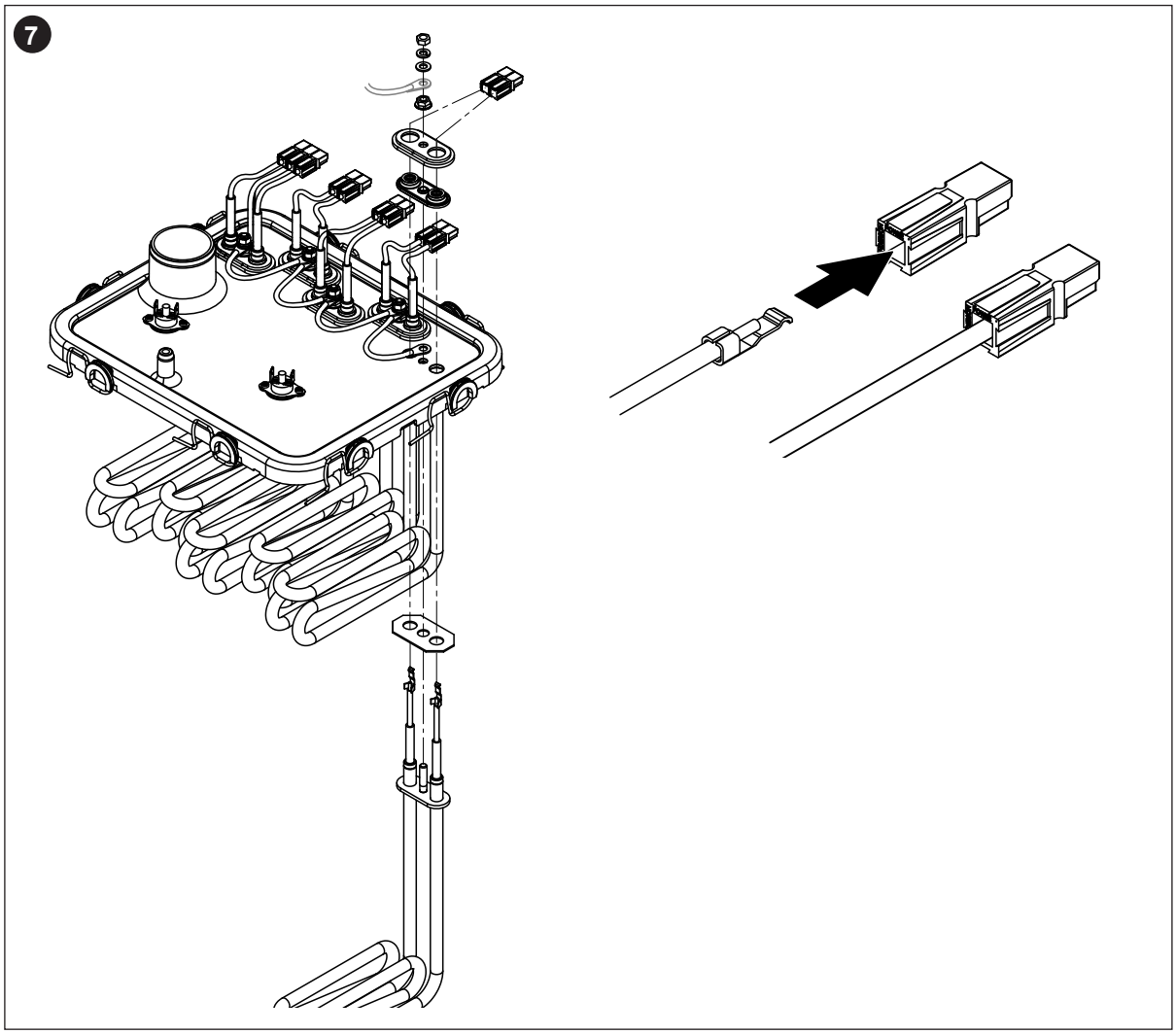

Assembly and installation of the steam tank

Assembly of the steam tank takes place in reverse sequence of the removal. Please note the following instructions:

- Installation of any heating elements which have been removed should follow the figure of *step 7* of the removal. Please take care that the heating elements are correctly positioned.
- Before installation of the steam tank cover check sealing. The sealing must be clean and undamaged (replace if indicated).
  Important: the sealing must be replaced at least once per year.

  Insert the cover sealing into the recess of the cover (consider installation position of the sealing, see figure of *step 5* of the removal.
- Before installation of the steam tank in the unit check O-ring in the steam tank receptacle and the snap ring for damage and replace if necessary.
- Moisten the O-ring in the steam tank receptacle with water (do not use grease or oil). Then, insert the stirrup on the backside of the steam tank into the retaining bracket on the back wall of the unit housing. Insert the connector on the bottom side of the steam tank into steam tank receptacle and push steam tank downwards until it comes to a stop.
  Important: Check whether the steam tank is correctly hooked in the retaining bracket on the back wall of the unit housing by pulling the steam tank to the front. A correctly mounted steam tank cannot be moved.
- Connect heating cable plugs into the corresponding sockets (see *Fig. 17*).
  Important: make sure the cables are not crossed!
- Attach connecting cables to the connectors of the overtemperature switch(es) (see *Fig. 17*).

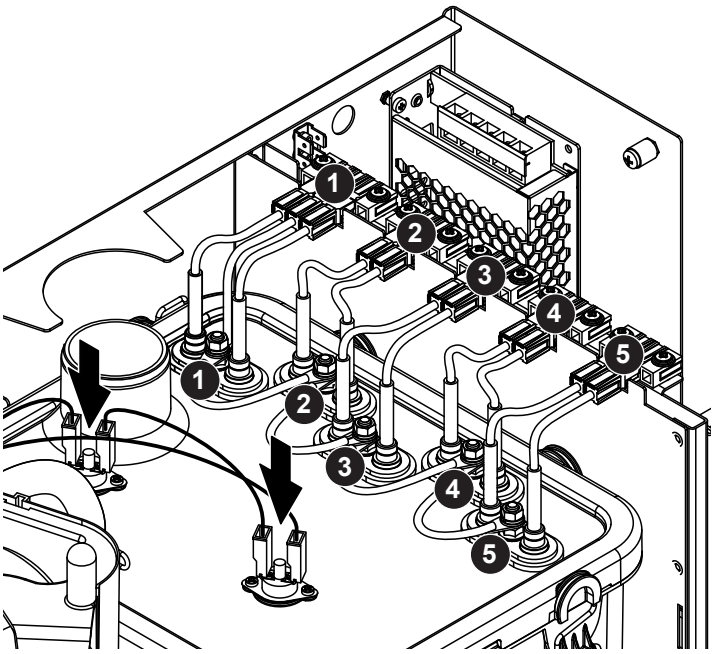

Fig. 17: Connection allocation of the heating cables

- Push steam hose onto the steam connector and fasten with hose clamp. A leaky steam hose can cause damp damage in the interior of the unit!
- Connect pressure equalizing hose to the connector on top of the steam tank and fix hose with the hose clamp.

7.4.3 Removal and installation of the filling cup, the level unit and the water hoses

For removing the filling cup, the level unit and the water hoses the steam tank must be removed first (see *chapter 7.4.2*).

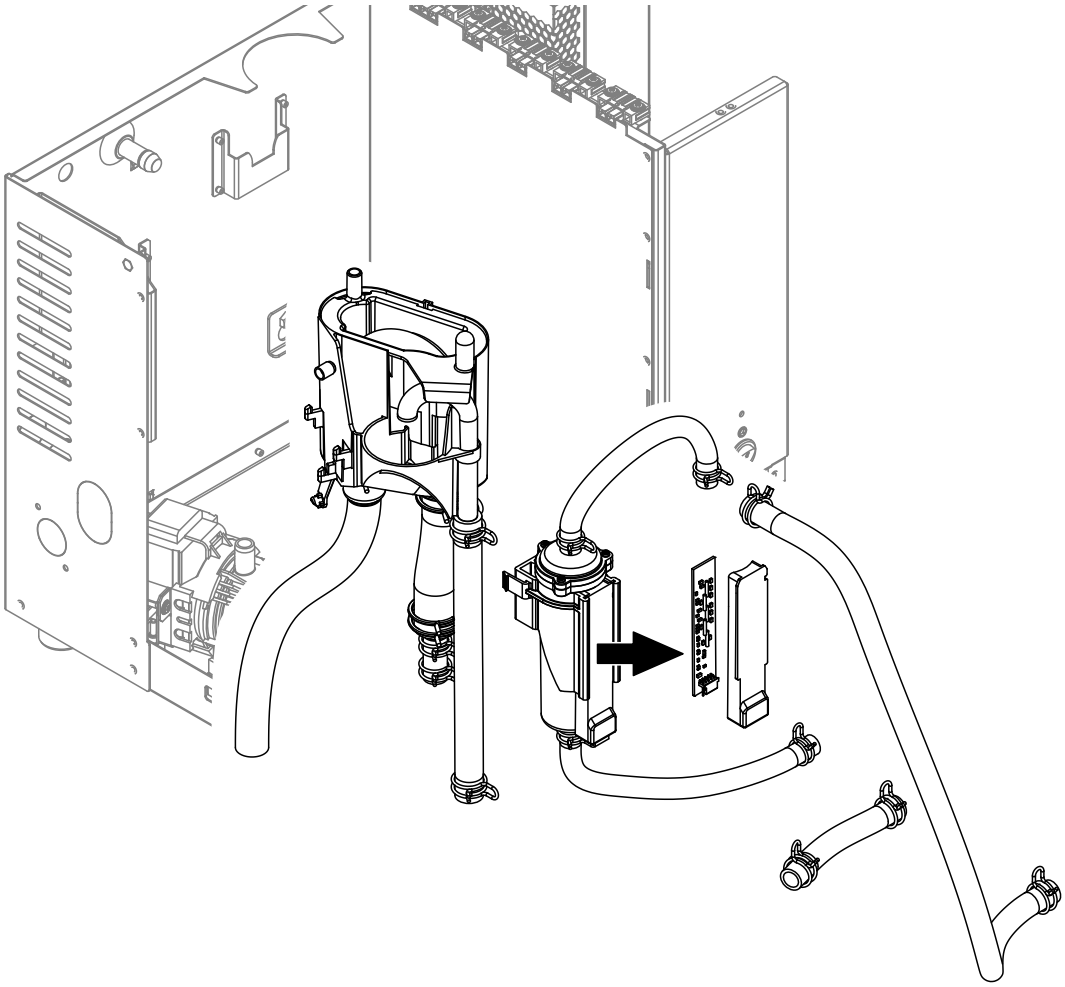

1. Release hose clamps, then disconnect all hoses from the corresponding connectors and remove the hoses.
   Note: The hoses connected to the filling cup and the level unit may also be removed together with the filling cup and the level unit (see illustration) and then disconnected from the connectors outside the unit.
2. **Carefully** pull fixing clip of the filling cup to the front, then push filling cup downwards until it comes to a stop and remove it to the front.
3. Unplug cable from the socket of the level unit PCB. Carefully remove level PCB together with the PCB cover from the level unit. Pinch locking clips of the level unit together and remove level unit to the front. If the level unit must be cleaned carefully remove level PCB together with the PCB cover from the level unit.

The installation of the filling cup, the level unit with control boards and the water hoses follows the reverse sequence of the removal. Before fixing the hoses to the connectors with the hose clamps, align the hoses in a way that they are not twisted.

Important: when installing the level unit make sure the two burls of the level unit engage into the holes of the third row of holes from the top. Otherwise a wrong level will be detected during operation.

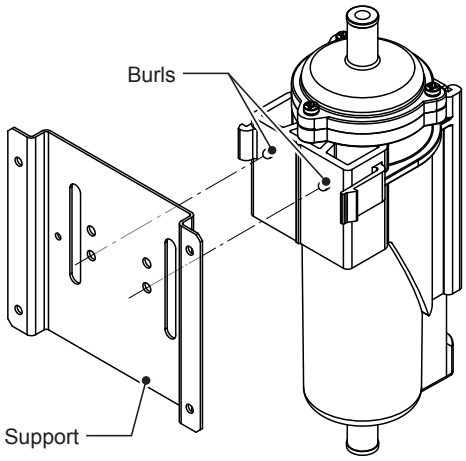

Fig. 18: Positioning of the level unit

7.4.4 Removal and installation of the drain pump

For removing the drain pump the steam tank must be removed first (see *chapter 7.4.2*).

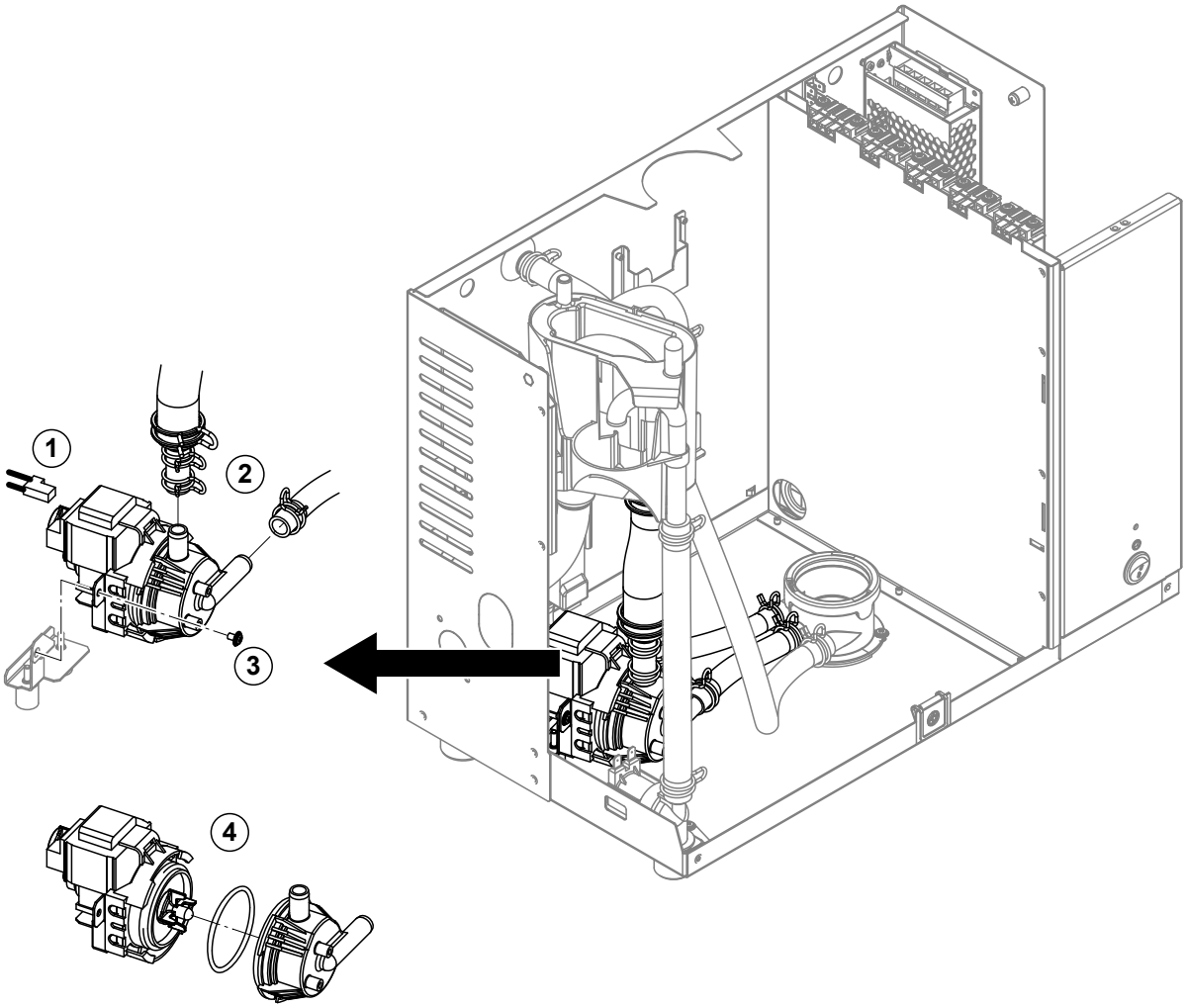

1. Detach electric cables (polarity of the cables must not be observed).
2. Release hose clamps and remove the hoses from the connectors.
3. Undo the screw on the bottom of the housing with Phillips screwdriver, then remove drain pump to the front.
4. Separate the electric motor from the pump body: release the lock on the bayonet catch, then counter-rotate the electric motor and the pump body. Remove O-ring.

The assembly and the installation of the drain pump follows the reverse sequence of the removal. Before assembling the pump, check O-ring for damage and replace if necessary. Then, place the O-ring on the centering collar and moisten the O-ring with water.

7.4.5 Removal and installation of the inlet valve

For removing the inlet valve the steam tank must **not** be removed.

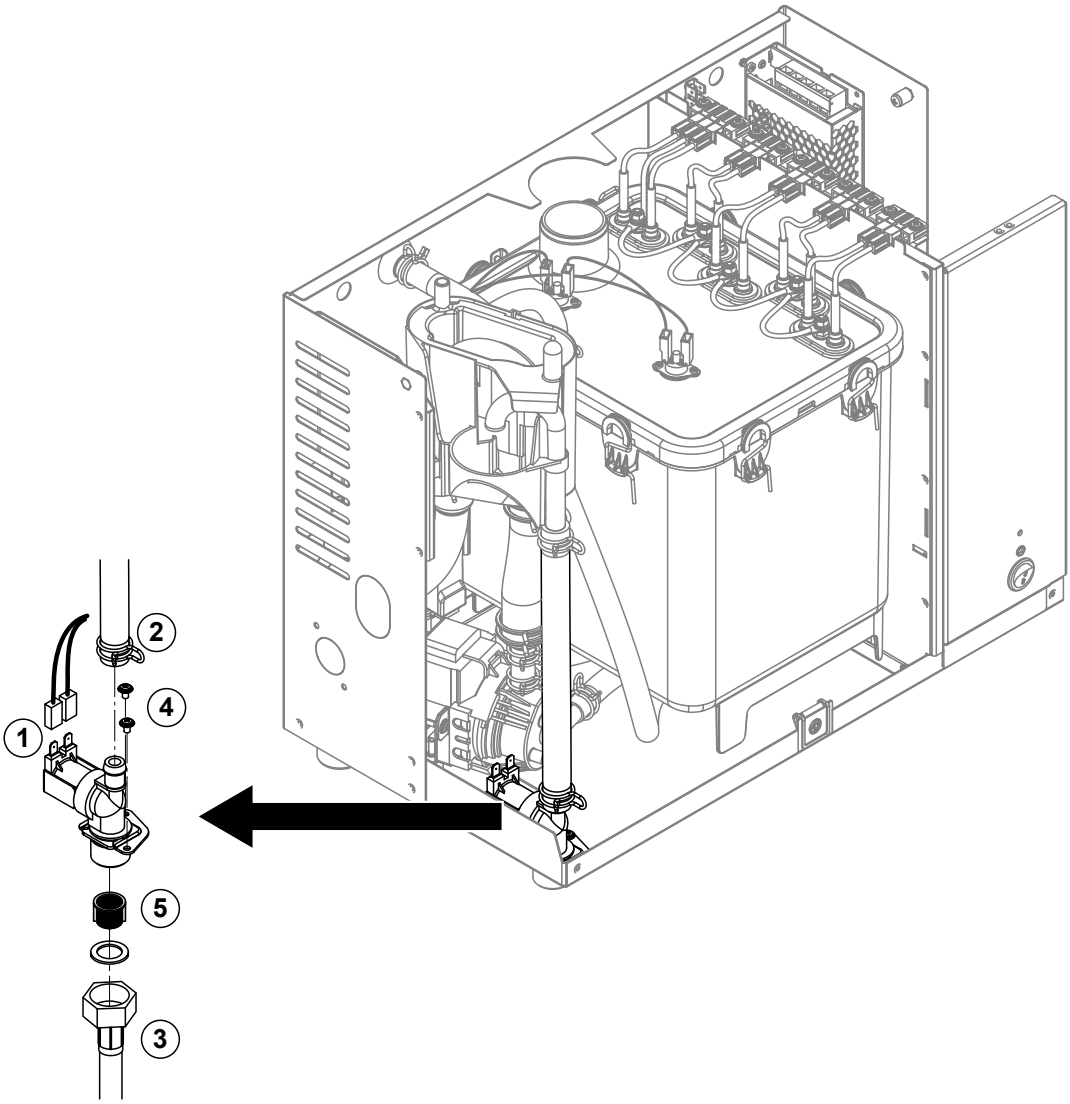

1. Detach electric cables (polarity of the cables must not be observed).
2. Release hose clamp and remove the hose from the connector.
3. Undo external water supply pipe and remove.
4. Undo the two screws with Phillips screwdriver, then remove the inlet valve.
5. Remove strainer insert with pointed pliers.

The installation of the inlet valve follows the reverse sequence of the removal. Before installing the valve make sure the strainer insert is installed in the inlet valve.

7.4.6 Removal and installation of the steam tank receptacle

For removing the steam tank receptacle the steam tank must be removed first (see *chapter 7.4.2*).

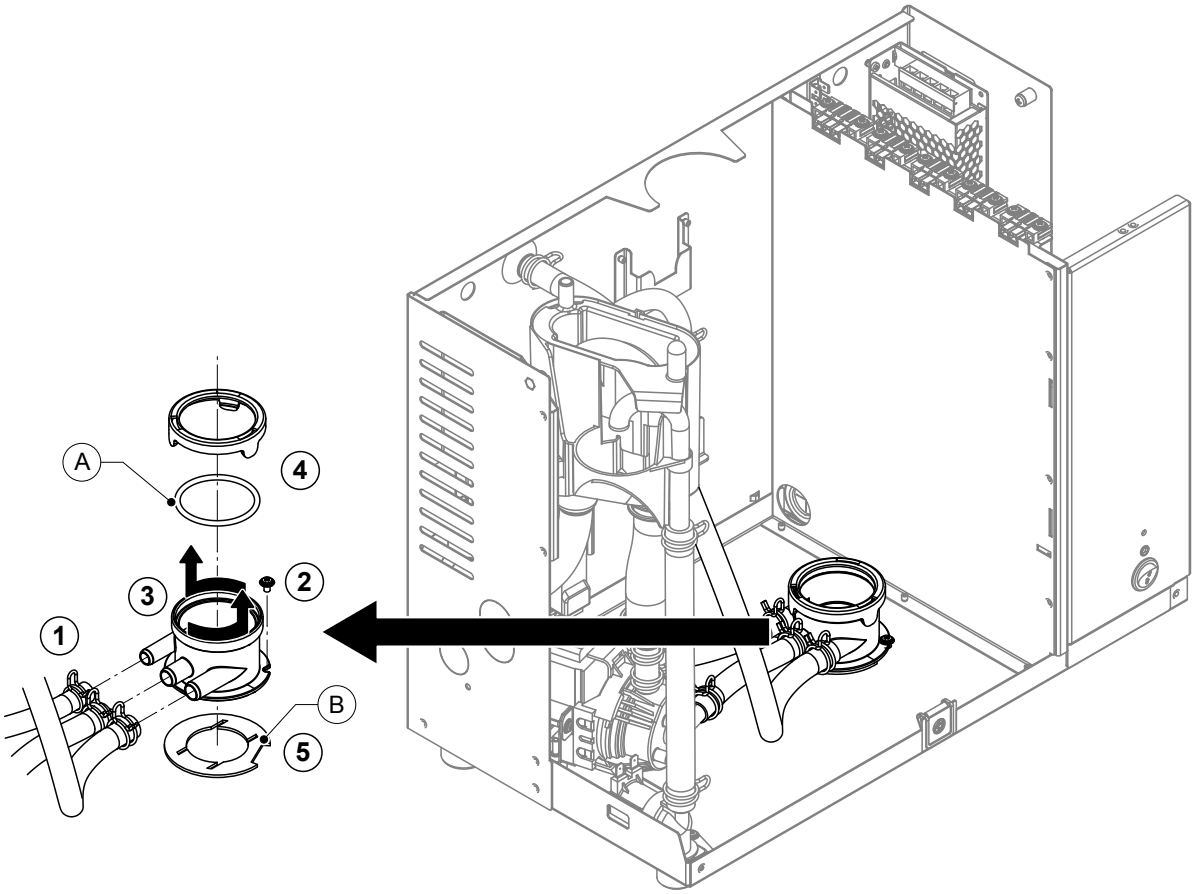

1. Release hose clamps and remove hoses from the connectors.
2. Undo the screw fixing steam tank receptacle to the bottom of the housing with Phillips screwdriver.
3. Turn steam tank receptacle counterclockwise to the stop and remove steam tank receptacle upwards.
4. Remove snap ring and O-ring "A".
5. Remove gasket "B" on the bottom side of the steam tank receptacle.

The installation of the steam tank receptacle follows the reverse sequence of the removal. Before mounting the steam tank receptacle, check O-ring "A", snap ring and gasket "B" for damage and replace if necessary.

7.5 Notes on cleaning the unit components

Unit component	What to clean and how to clean
Steam tank / steam tank strainer 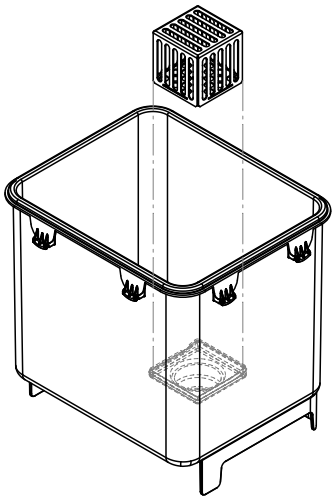	• Carefully brush off any limescale from the components (do not use a wire brush). If the components are heavily calcified, place them in an 8% formic acid solution (**observe safety notes in** *chapter 7.6*), until the limescale comes off. • Wash components with a lukewarm soap solution, then rinse well with tap water.
Steam tank cover and Heating elements 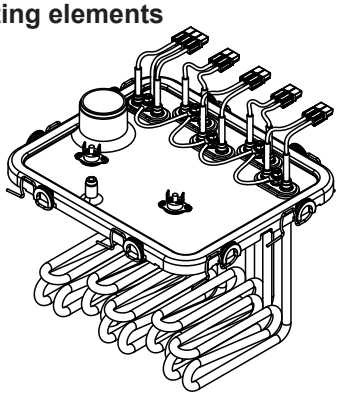	• Immerse cover with heating elements fitted to 2 cm below the rim of the cover in a container with 8% formic acid (**observe safety notes in** *chapter 7.6*). Allow the acid to take effect until the scale coating on the heating elements has dissolved. Note: The heating elements do not have to be entirely free from scale. • Rinse heating elements thoroughly with fresh water. **CAUTION!** Ensure that the electrical connections remain dry. **CAUTION!** On no account remove scale coating on the heating elements with tools (screwdriver, scraper, etc.) or by striking. This could damage the heating elements. • Carefully remove any limescale underneath the cover and on the thermostat(s) with a soft bristled brush (do not use a wire brush). The thermostat(s) must be free of limescale.
Hoses 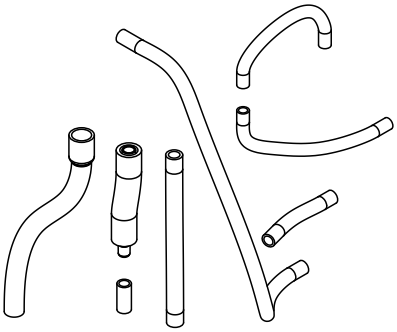	• Remove any limescale in the hoses by carefully twisting and the hoses. Then, rinse the tubes well with hot tap water.

Unit component	What to clean and how to clean
Inlet valve 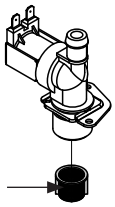 Strainer	• Carefully remove any limescale inside the inlet valve and on the strainer using a soft bristled brush (do not use a wire brush). • Wash inlet valve and strainer insert with a lukewarm soap solution, then rinse well with tap water. Let the inlet valve dry before reinstallation!
Drain pump O-ring 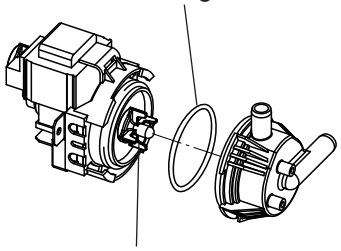 Pump wheel	• Carefully remove any limescale from the pump housing and the pump wheel using a soft bristled brush (do not use a wire brush). • Wipe pump wheel with a damp cloth. Wash the pump housing with a lukewarm soap solution and rinse well with tap water. Let the drain pump dry before reinstallation!
Filling cup 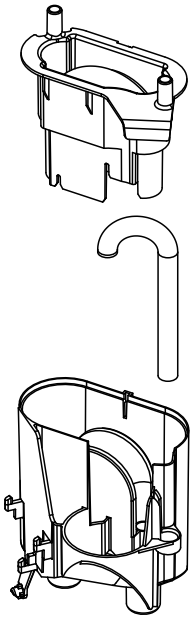	• Disassemble filling cup. • Carefully remove any limescale from the components of the filling cup and its connectors using a soft bristled brush (do not use a wire brush). If components of the filling cup are heavily calcified, place them in an 8% formic acid solution (**observe safety notes in** *chapter 7.6*), until the limescale comes off. • Wash the components of the filling cup with a lukewarm soap solution and rinse well with tap water. • Reassemble filling cup.
Steam tank receptacle 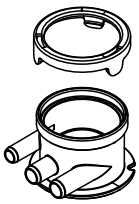	• Carefully remove any limescale from the steam tank receptacle and its connectors using a soft bristled brush (do not use a wire brush). If the steam tank receptacle is heavily calcified, place it in an 8% formic acid solution (**observe safety notes in** *chapter 7.6*), until the limescale comes off. • Wash the steam tank receptacle with a lukewarm soap solution and rinse well with tap water.

Unit component	What to clean and how to clean
Level unit 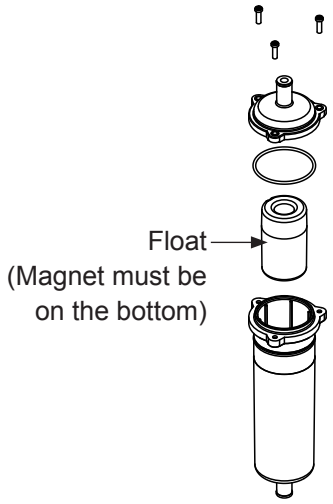 	• Disassemble level unit. • Carefully remove any limescale inside the housing of the level unit and its connectors using a soft bristled brush (do not use a wire brush). If the housing of the level unit is heavily calcified, place it in an 8% formic acid solution (**observe safety notes in** *chapter 7.6*), until the limescale comes off. **CAUTION!** Remove any limescale on the float using a soft bristled brush (do not use a wire brush)! • Carefully remove any limescale on the float using a soft bristled brush (do not use a wire brush)! • Wash components of the level unit with a lukewarm soap solution and rinse well with tap water. • Reassemble level unit. **Important: When inserting the float in the housing of the level unit make sure that the magnet of the float points to the bottom of the housing.**
Interior of the unit (water side only)	Wipe the interior of the unit with a damp cloth without using any cleaning agent. **CAUTION**: Take care that the electrical connections and the electronic components remain dry!

7.6 Notes on cleaning agents

Only use cleaning agents stated in the table above. The use of disinfectants is only permitted if they do not leave any toxic residues. In any case the parts must be thoroughly rinsed with clean drinking water after cleaning.

WARNING!

Formic acid is harmful to the skin, eyes and the respiratory tracts. Therefore prevent your skin, eyes and respiratory tracts from getting in touch with the acid and its vapours (wear gloves, goggles and work in a well ventilated room or outside).

CAUTION!

Do not use any solvents, aromatized or halogenized hydrocarbons or other aggressive substances as they may cause damage to the components of the unit.

It is mandatory to observe and comply with the manufacturers information and instructions regarding the cleaning agents used. Observe in particular: all information relating to the protection of personnel, environmental protection and restrictions regarding usage.

7.7 Replacing the optional filter cartridge

Note: For the replacement of the filter cartridge the water supply must not be closed since the filter head is equipped with a check valve.

To replace the filter cartridge, proceed as follows

1. Switch off the Condair Omega via the unit switch.
2. Make sure the white hose is connected to the bypass connector on the filter head.
3. Place a rag below the filter cartridge in order to collect any residual water which flows out when the filter cartridge is removed.
4. Hold the filter cartridge firmly with both hands on the circumference, so that it does not fall down during removal. Then, carefully turn filter cartridge in the direction of the arrow as shown in *Fig. 19 left* until it comes to a stop (approx. 45 °) and remove filter cartridge.
5. Unpack new cartridge and remove protecting cap.
6. Place the filter cartridge below the filter head in such a way, that the label on the filter cartridge points to the front (that way all necessary information is always visible).
7. Simultaneously push filter cartridge upwards and turn it until the filter cartridge engages into the bayonet catch in the filter head. Then, while slightly pushing the filter cartridge upwards turn filter cartridge in the direction of the arrow as shown in *Fig. 19 right* into the filter head until it comes to a stop (approx. 45 °).

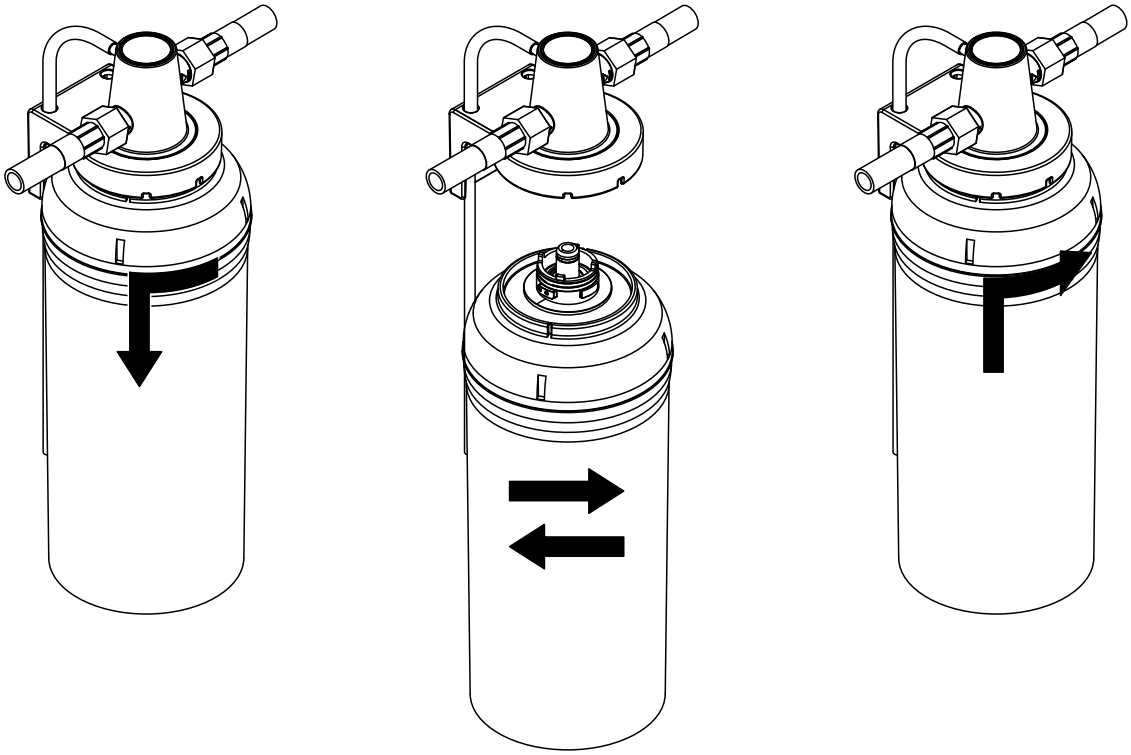

Fig. 19: Replacing the filter cartridge

8. Pace an empty container with at least 10 l capacity beside the filter cartridge and lead the open end of the bypass hose into that container.

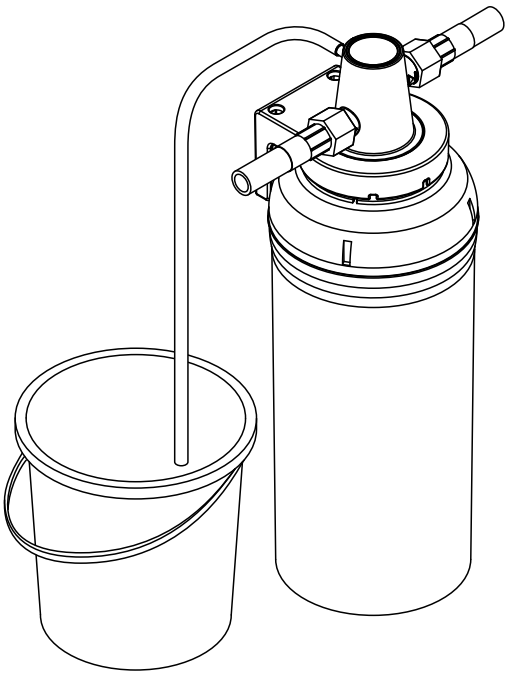

Fig. 20: Lead bypass hose into an empty container

9. Turn valve in the filter head in such a way, that "open" points to "Bypass" (flushing position, see *Fig. 21*). Keep valve in this position until bubble-free water flows out of the hose. Then turn valve in the filter head in such a way, that "open" points to "Supply" (operating position, see *Fig. 22*).

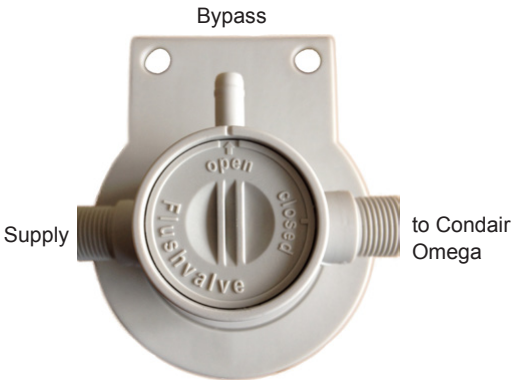

Fig. 21: Set valve to "Bypass" (flushing position)

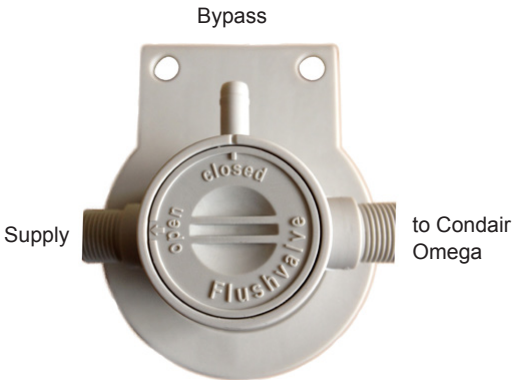

Fig. 22: Set valve to "Supply" (operating position)

Note: a milky or dark discolouration of the water flowing out is normal and does not indicate a contamination.

Disposal of the exhausted filter cartridge

Exhausted filter cartridges can be disposed of in accordance with local waste disposal regulations with domestic waste.

7.8 Resetting the maintenance counter

If the maintenance work (unit maintenance or replacement of the optional filter cartridge) has been carried out, the maintenance indication or maintenance counter must be reset. Proceed as follows:

Resetting the maintenance counter on the Condair Omega **without** SPA Display:

1. Make sure that the unit cover is attached and secured.
2. Switch on the Condair Omega.
3. Through the respective opening on the front of the unit press the reset button until the yellow LED is off.
   Important: the maintenance counter must be reset only, if the respective maintenance work has been carried out!

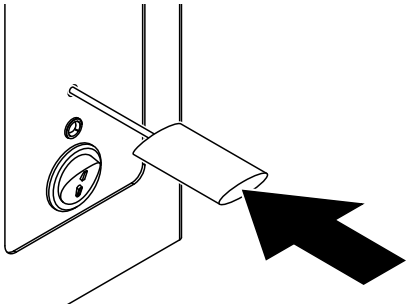

Fig. 23: Resetting the maintenance counter

Resetting the maintenance counter on the Condair Omega **with** SPA Display:

1. Make sure that the unit cover is attached and secured.
2. Switch on the Condair Omega.
3. Press the menu button to access the main menu and enter the password "0000" (if the display lock is activated).
4. Select the "Service" submenu and enter the password "3562".
5. **Resetting the maintenance counter for the "unit maintenance"**:
   Important: the maintenance counter for the "unit maintenance" must be reset only, if all work of the unit maintenance has been carried out!
   - Select "Device Service" submenu.
   - Select the reset function "Service Done".

   Resetting the maintenance counter for the "cartridge replacement":
   Important: the maintenance counter for the "cartridge replacement" must be reset only, if the cartridge has been replaced!
   - Select "Filter Cartridge" submenu.
   - Select the reset function "Cartridge Replaced".
4. The reset dialogue appears:
   - Press the **<Tick>** button to reset the corresponding maintenance counter. The maintenance indication and the maintenance counter are reset.
   - Press the **<Cancel>** button if the unit maintenance work or the replacement of the filter cartridge has not been completed yet and you want abort the reset procedure. The control unit returns to the "Service" submenu.

Note: The maintenance counters can also be reset via the web interface.

8 Fault elimination

8.1 Important notes on fault elimination

Qualification of personnel

Repair work must be carried out only by **qualified and well trained professionals authorised by the owner**.

Repair work relating to the electrical installation must be carried out by an electrician or professionals authorised by the owner.

General notes

Only use original spare parts from your Condair representative to replace defective parts.

Safety

Before starting repair work on the Condair Omega set the unit out of operation and disconnect it from the mains (see *chapter 4.6*).

DANGER!

Make sure the Condair Omega is separated from the mains (check with voltage tester) and the shut-off valve in the water supply line is closed.

CAUTION!

The electronic components inside the control compartment of the Condair Omega are very sensitive to electrostatic discharge.

Prevention: Before carrying out any repair work to the electrical or electronic equipment of the Condair Omega, appropriate measures must be taken to protect the respective components against damage caused by electrostatic discharge (ESD protection).

8.2 Fault indication

Fault indication on the Condair Omega **without** SPA Display:

Malfunctions during operation detected by the control software are indicated by the **yellow illuminated LED** (warning present or maintenance due) or the **red illuminated LED** (fault present) above the unit switch.

Note: The current warning and/or fault messages can be interrogated via the integrated web interface and a web browser. For that purpose, a laptop must be connected to the Condair Omega. Please refer to the notes in the separate web interface manual.

Fault indication on the Condair Omega **with** SPA Display:

Malfunctions during operation detected by the control software are indicated by the **yellow illuminated LED** (warning present or maintenance due) or the **red illuminated LED** (fault present) above the unit switch and by the **yellow or red warning triangle** in the upper left corner of the display.

Warning (maintenance indication)

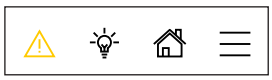

Warnings and/or a due maintenance are indicated by the yellow warning triangle in the home screen and the yellow illuminated LED above the unit switch. The Condair Omega continues operation. Depending on the type of warning, certain operational restrictions may occur.

Fault

Operational states where further operation is limited or not possible, or where further operation would damage the system are indicated by the red warning triangle in the home screen and the red illuminated LED above the unit switch. Depending on the type of fault the steam production is stopped or the Condair Omega continues normal operation.

By pressing on the warning triangle the error list is shown with all active warning and fault messages. By pressing on the corresponding Warning or Fault entry additional information regarding the malfunction are displayed (see display on the far-right).

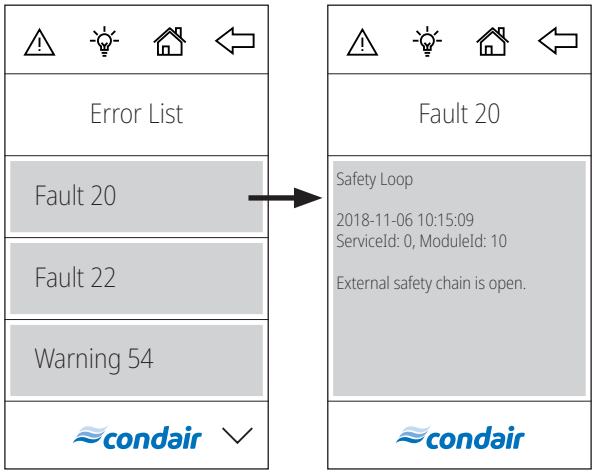

8.3 Malfunction list

Most operational malfunctions are not caused by faulty equipment but rather by improper installation or disregarding of planning guidelines. Therefore, a complete fault diagnosis always involves a thorough examination of the entire system (e.g. hose connections, control system, etc.).

Warning	Fault	Message	Possible causes	Remedy
W14	**—**	**Max Door Open**	The cabin door was open too long. Note: The Condair Delta SPA Control Box or the Condair Omega automatically disconnect all heating systems (steam, bench heating, sauna heater, etc.) until the cabin door is closed again.	
			The cabin door was open longer than the set "Door open" time.	Close the cabin door.
			The door observation mode is active and has triggered.	The Condair Delta SPA Control Box or the Condair Omega needs to be restarted.
—	**E18**	**Cabin Temp. Sensor Instable**	Measurement of cabin temperature unstable. Note: The operation of the Condair Delta SPA Control Box or Condair Omega is stopped. After the specified "Instable Time" has elapsed, operation will automatically resume.	
			Unstable temperature measurement due to manipulation of the temperature sensor in the cabin.	Check temperature sensor in the cabin.
—	**E20**	**Safety loop**	External safety loop is open. Note: The Condair Delta SPA Control Box or the Condair Omega go into standby operation. As soon as the external safety loop is closed again the Condair Delta SPA Control Box and the Condair Omega continue to work normally.	
			One or more monitoring device(s) of the external safety loop has/have triggered.	Check the monitoring device(s) of the external safety loop.
			External safety loop not connected correctly.	Let have the wiring of the external safety loop be checked and correctly connected by an electrician.
—	**E21**	**Max. level**	Water level in the steam tank of the Condair Omega too high. Note: The operation of the Condair Omega is stopped. After the fault has been eliminated, the Condair Omega must be switched off and on again. If the Condair Omega is controlled by a Condair Delta SPA Control Box, the Condair Delta SPA Control Box must also be switched off and on again after the Condair Omega has been restarted.	
			Level unit calcified.	Clean level unit.
			Hose connections between level unit and steam tank blocked.	Check/clean hose connections between level unit and steam tank blocked.

Warning	Fault	Message	Possible causes	Remedy
—	E22	**Max. filling time**	Maximum filling time exceeded. Note: The operation of the Condair Omega is stopped. After the fault has been eliminated, the Condair Omega must be switched off and on again. If the Condair Omega is controlled by a Condair Delta SPA Control Box, the Condair Delta SPA Control Box must also be switched off and on again after the Condair Omega has been restarted.	
			Water supply blocked, shut-off valve in the water supply line closed. Water pressure too low.	Check water feed (filter, pipes, etc.), check/open shut-off valve, Check water pressure.
			Inlet valve blocked or defective.	Check strainer inside the inlet valve, clean if necessary. Replace valve.
			Excessive back pressure in the steam line (pressure in steam bath cabin too high, steam line too long or kinked), causing water loss via filling cup.	Check pressure in the steam cabin, inspect steam installation.
			Water system leaky.	Check/seal water system.
W29	—	**Service required**	The maintenance counter for the unit maintenance of the Condair Omega has elapsed. Note: The Condair Delta SPA Control Box or the Condair Omega, respectively continue to work normally.	
			The maintenance counter for the unit maintenance has elapsed.	Carry out unit maintenance in accordance with the operating instructions of the Condair Omega. Then, reset the maintenance counter.
—	E32	**Cabin Temp. Sensor out of Range**	The measured temperature in the cabin is outside the permissible range. Note: The operation of the Condair Delta SPA Control Box or Condair Omega is stopped. After eliminating the fault, the Condair Delta SPA Control Box or the Condair Omega must be switched off and on again (depending on which device the fault has occurred.	
			Wrong temperature sensor connected.	Check if the correct temperature sensor is connected.
			Temperature sensor not or not correctly connected.	Check/correctly connect the wiring of the temperature sensor.
			Incorrect configuration of the temperature sensor in the control software.	Check/correctly set temperature sensor settings in the control software
			Temperature sensor defective.	Replace temperature sensor.

Warning	Fault	Message	Possible causes	Remedy
—	E46	**Max. drain time**	Maximum drain time of the Condair Omega exceeded. Note: The operation of the Condair Omega is stopped. After the fault has been eliminated, the Condair Omega must be switched off and on again. If the Condair Omega is controlled by a Condair Delta SPA Control Box, the Condair Delta SPA Control Box must also be switched off and on again after the Condair Omega has been restarted.	
			Drain pump not or not correctly connected.	Check/correctly connect drain pump.
			Drain hose inside the unit kinked or blocked.	Check/clean drain hose inside the unit, replace if necessary.
			Water drain obstructed (external drain line or funnel blocked).	Clean external drain line and siphon.
			Hoses to level unit blocked.	Clean or replace hoses.
			Drain pump defective.	Replace drain pump.
—	E47	**Level unit**	The level in the steam tank of the Condair Omega is in an unacceptable range. Note: The operation of the Condair Omega is stopped. After the fault has been eliminated, the Condair Omega must be switched off and on again. If the Condair Omega is controlled by a Condair Delta SPA Control Box, the Condair Delta SPA Control Box must also be switched off and on again after the Condair Omega has been restarted.	
			Level unit defective.	Replace level unit.
—	E56	**Int. safety loop**	The internal safety loop of the Condair Omega is open. Note: The operation of the Condair Omega is stopped. After the fault has been eliminated, the Condair Omega must be switched off and on again. If the Condair Omega is controlled by a Condair Delta SPA Control Box, the Condair Delta SPA Control Box must also be switched off and on again after the Condair Omega has been restarted.	
			Overtemperature switch(es) not connected correctly.	Let have the wiring of the overtemperature switch(es) checked/correctly connected by an electrician.
			Overtemperature switch(es) defective	Let have the overtemperature switch(es) be replaced by an electrician.
			Overtemperature switch(es) has/have triggered.	Let have the Condair Omega be checked by a Condair service technician. **Important: for safety reasons all heating elements have to be replaced if the overtemperature switch(es) has/have triggered.**
—	E57	**Cabin Over Temp.**	Too high temperature in the cabin or on a heating element. Note: The operation of the Condair Delta SPA Control Box or Condair Omega is stopped. After eliminating the fault, the Condair Delta SPA Control Box or the Condair Omega must be switched off and on again (depending on which device the fault has occurred).	
			Cabin overtemperature switch has triggered due to excessive cabin temperature	Have the cabin overtemperature switch checked by an electrician.
			Heating element overtemperature switch has triggered due to high temperature of a heating element.	Check heating elements monitored by the overtemperature switch.

Warning	Fault	Message	Possible causes	Remedy
—	E87	**Local 24 V supply**	Local 24 V voltage on control board of the Condair Delta SPA Control Box or the Condair Omega out of valid range. Note: The Condair Delta SPA Control Box or the Condair Omega goes into standby mode. If the fault disappears on its own, the Condair Delta SPA Control Box or the Condair Omega continues to run normally.	
			Short circuit on the supply module or supply module defective.	Contact your Condair representative.
—	E88	**Local 5 V supply**	Local 5 V voltage on control board of the Condair Delta SPA Control Box or the Condair Omega out of valid range. Note: The Condair Delta SPA Control Box or the Condair Omega goes into standby mode. If the fault disappears on its own, the Condair Delta SPA Control Box or the Condair Omega continues to run normally.	
			Short circuit on the supply module or supply module defective.	Contact your Condair representative.
—	E97	**Ext. 24 V supply**	External 24 V supply of the Condair Delta SPA Control Box or the Condair Omega faulty. Voltage too high or too low Note: The Condair Delta SPA Control Box or the Condair Omega, respectively continue to work normally.	
			Fuse "F2" on the control board defective.	Replace fuse "F2" on the control board.
			Short circuit on external connection.	Let have the short circuit be eliminated by an electrician.
			Overload on external connection.	Disconnect load on external connection.
—	E120	**Min. fill time**	Minimum filling time of the Condair Omega underrun. Note: The operation of the Condair Omega is stopped. After the fault has been eliminated, the Condair Omega must be switched off and on again. If the Condair Omega is controlled by a Condair Delta SPA Control Box, the Condair Delta SPA Control Box must also be switched off and on again after the Condair Omega has been restarted.	
			Level unit calcified.	Clean level unit.
			Hose connections between level unit and steam tank blocked.	Check/clean hose connections between level unit and steam tank.
			Strainer insert in the steam tank strongly calcified or unit strongly calcified.	Carry out the unit maintenance, then reset the maintenance counter "Service Done".
W121	—	**Max. evaporation time**	Maximum vaporisation time of the Condair Omega exceeded. Note: The Condair Omega carries out a level test and, if the test is successful, continues to operate normally and the warning message is cleared. If the level test was not successful, the warning message appears again and the level test is repeated. If the warning occurs repeatedly, check the following points.	
			Individual heating elements defective.	Replace corresponding heating elements.
			Mains voltage too low or failure of a phase (L1, L2 or L3).	Let have the mains voltage and connections be checked by an electrician.
			Steam line too long or not insulated.	Maintain maximum steam line lengths (max. 8 m), Insulate steam line.

Warning	Fault	Message	Possible causes	Remedy
—	E155	Ext. 5 V supply	External 5 V supply of the Condair Omega faulty. Voltage too high or too low. Note: The Condair Delta SPA Control Box or the Condair Omega, respectively continue to work normally.	
			Short circuit on LED.	Contact your Condair representative.
			Overload on LED connection.	Check LED connection.
	E156	EEPROM read	Reading from EEPROM not possible. Note: In order to reset the fault, the Condair Delta SPA Control Box or the Condair Omega must be switched off and on again (depending on which device the fault occurred).	
			EEPROM defective.	Contact your Condair representative.
	E157	EEPROM write	Writing to EEPROM not possible. Note: In order to reset the fault, the Condair Delta SPA Control Box or the Condair Omega must be switched off and on again (depending on which device the fault occurred).	
			EEPROM defective.	Contact your Condair representative.
—	E158	Heat Element 1 control relay	Heating element control relay 1 does not work correctly. Note: The operation of the Condair Delta SPA Control Box or Condair Omega is stopped. After the fault has been eliminated, the Condair Omega must be switched off and on again. If the Condair Omega is controlled by a Condair Delta SPA Control Box, the Condair Delta SPA Control Box must also be switched off and on again after the Condair Omega has been restarted.	
			Heating element control relay 1 on control board blocked.	Contact your Condair representative.
—	E159	Heat Element 2 control relay	Heating element control relay 2 does not work correctly. Note: The operation of the Condair Delta SPA Control Box or Condair Omega is stopped. After the fault has been eliminated, the Condair Omega must be switched off and on again. If the Condair Omega is controlled by a Condair Delta SPA Control Box, the Condair Delta SPA Control Box must also be switched off and on again after the Condair Omega has been restarted.	
			Heating element control relay 2 on control board blocked.	Contact your Condair representative.
—	E160	Heat Element 3 control relay	Heating element control relay 3 does not work correctly. Note: The operation of the Condair Delta SPA Control Box or Condair Omega is stopped. After the fault has been eliminated, the Condair Omega must be switched off and on again. If the Condair Omega is controlled by a Condair Delta SPA Control Box, the Condair Delta SPA Control Box must also be switched off and on again after the Condair Omega has been restarted.	
			Heating element control relay 3 on control board blocked.	Contact your Condair representative.
—	E161	Heat Element 4 control relay	Heating element control relay 4 does not work correctly. Note: The operation of the Condair Delta SPA Control Box or Condair Omega is stopped. After the fault has been eliminated, the Condair Omega must be switched off and on again. If the Condair Omega is controlled by a Condair Delta SPA Control Box, the Condair Delta SPA Control Box must also be switched off and on again after the Condair Omega has been restarted.	
			Heating element control relay 4 on control board blocked.	Contact your Condair representative.

Warning	Fault	Message	Possible causes	Remedy
—	E162	**Heat Element 5 control relay**	Heating element control relay 5 does not work correctly. Note: The operation of the Condair Delta SPA Control Box or Condair Omega is stopped. After the fault has been eliminated, the Condair Omega must be switched off and on again. If the Condair Omega is controlled by a Condair Delta SPA Control Box, the Condair Delta SPA Control Box must also be switched off and on again after the Condair Omega has been restarted.	
			Heating element control relay 5 on control board blocked.	Contact your Condair representative.
W163	—	**Cartridge replacement**	The maintenance counter for replacement of the optional filter cartridge in the water supply of the Condair Omega has elapsed. Note: The Condair Delta SPA Control Box or the Condair Omega, respectively continue to work normally.	
			Optional filter cartridge is exhausted.	Replace filter cartridge, then reset the maintenance counter (see Condair Omega operation manual).
W164	—	**Hardware replacement**	The maintenance counter for replacement of the hardware of the Condair Omega or the Condair Delta SPA Control Box has elapsed. Note: The Condair Delta SPA Control Box or the Condair Omega, respectively continue to work normally.	
			The hardware of the Condair Omega or the Condair Delta SPA Control Box is outdated.	Contact your Condair representative.
—	E165	**Max. session time**	The maximum bathing operating time has been exceeded. Note: The operation of the Condair Delta SPA Control Box or Condair Omega is stopped. After eliminating the fault, the Condair Delta SPA Control Box or the Condair Omega must be switched off and on again.	
			The bathing operation was not stopped within the set maximum bathing operating time.	Check/correctly set the setting of the maximum bathing operating time.
W166	—	**Forced Shut Down**	During the drying phase, a forced shutdown was triggered. Note: The Condair Delta SPA Control Box or the Condair Omega, respectively continue to work normally. After a forced shutdown a new bathing phase can be started at any time. The warning message will be automatically reset upon restart.	
			The device was switched off before the drying phase was completed.	Wait until the set drying time has expired.
W168	—	**Low Water Reservoir Level**	The level in the water reservoir of the sauna heater is too low. Note: The Condair Delta SPA Control Box continues to run normally.	
			Water level in the water reservoir too low.	After the heating elements have cool down, top up the water in the water reservoir.

Warning	Fault	Message	Possible causes	Remedy
—	E170	**Hum. Sensor out of Range**	The measured humidity in the cabin is outside the permissible range. Note: The operation of the Condair Delta SPA Control Box or Condair Omega is stopped. After eliminating the fault, the Condair Delta SPA Control Box or the Condair Omega must be switched off and on again (depending on which device the fault has occurred).	
			Wrong humidity sensor connected.	Check that the correct humidity sensor is connected.
			Humidity sensor not connected or not correctly connected.	Check/correctly connect the wiring of the humidity sensor.
			Incorrect configuration of the humidity sensor in the control software.	Check/correctly set the humidity sensor settings in the control software.
			Humidity sensor defective.	Replace humidity sensor.
—	E171	**Hum. Sensor Instable**	Measurement of cabin humidity unstable. Note: The operation of the Condair Delta SPA Control Box or Condair Omega is stopped. After eliminating the fault, the Condair Delta SPA Control Box or the Condair Omega must be switched off and on again (depending on which device the fault has occurred).	
			Unstable humidity measurement due to manipulation of the humidity sensor in the cabin.	Check humidity sensor in the cabin.
—	E172	**Bench Sensor out of Range**	The measured bench temperature in the cabin is outside the permissible range. Note: The operation of the Condair Delta SPA Control Box or Condair Omega is stopped. After eliminating the fault, the Condair Delta SPA Control Box or the Condair Omega must be switched off and on again (depending on which device the fault has occurred).	
			Wrong temperature sensor connected.	Check if the correct temperature sensor is connected.
			Temperature sensor not or not correctly connected.	Check/correctly connect the wiring of the temperature sensor.
			Incorrect configuration of the temperature sensor in the control software.	Check/correctly set temperature sensor settings in the control software
			Temperature sensor defective.	Replace temperature sensor.
—	E173	**Wall Sensor out of Range**	The measured wall temperature in the cabin is outside the permissible range. Note: The operation of the Condair Delta SPA Control Box or Condair Omega is stopped. After eliminating the fault, the Condair Delta SPA Control Box or the Condair Omega must be switched off and on again (depending on which device the fault has occurred).	
			Wrong temperature sensor connected.	Check if the correct temperature sensor is connected.
			Temperature sensor not or not correctly connected.	Check/correctly connect the wiring of the temperature sensor.
			Incorrect configuration of the temperature sensor in the control software.	Check/correctly set temperature sensor settings in the control software
			Temperature sensor defective.	Replace temperature sensor.

Warning	Fault	Message	Possible causes	Remedy
—	E174	**Oven Sensor out of Range**	The measured sauna heater temperature is outside the permissible range. Note: The operation of the Condair Delta SPA Control Box or Condair Omega is stopped. After eliminating the fault, the Condair Delta SPA Control Box or the Condair Omega must be switched off and on again (depending on which device the fault has occurred).	
			Wrong temperature sensor connected.	Check if the correct temperature sensor is connected.
			Temperature sensor not or not correctly connected.	Check/correctly connect the wiring of the temperature sensor.
			Incorrect configuration of the temperature sensor in the control software.	Check/correctly set temperature sensor settings in the control software
			Temperature sensor defective.	Replace temperature sensor.
W175	—	**Critical Cabin Temp.**	The measured cabin temperature has exceeded the critical temperature limit. Note: The Condair Delta SPA Control Box or the Condair Omega automatically disconnect all heating systems (steam, bench heating, sauna heater, etc.) until the cabin temperature is within the permissible range again.	
			The cabin temperature has exceeded the critical temperature limit.	Make sure the temperature setpoint value or critical temperature is set correctly.
W176	—	**Critical Bench Temp.**	The measured bench temperature has exceeded the critical temperature limit. Note: The Condair Delta SPA Control Box or the Condair Omega automatically disconnect the bench heating until the temperature of the bench heating is within the permissible range again.	
			The bench temperature has exceeded the critical temperature limit.	Make sure the temperature setpoint value or critical temperature is set correctly.
W177	—	**Critical Wall Temperature**	The measured wall temperature has exceeded the critical temperature limit. Note: The Condair Delta SPA Control Box or the Condair Omega automatically disconnect the wall heating until the temperature of the wall heating is within the permissible range again.	
			The wall temperature has exceeded the critical temperature limit.	Make sure the temperature setpoint value or critical temperature is set correctly.
W178	—	**Critical Biosauna Enthalpy**	The measured temperature and humidity values have exceeded the limit of the critical range of the enthalpy curve. Note: The Condair Delta SPA Control Box automatically disconnects all heating systems (steam, sauna heater, etc.) until the cabin temperature and cabin humidity are within the permissible range again.	
			The temperature and humidity values have exceeded the limit of the critical range of the enthalpy curve.	Make sure that the cabin temperature and cabin humidity setpoints are set correctly.
—	E179	**Over Enthalpy Biosauna**	The measured temperature and humidity values are in an inadmissible range. Note: The operation of the Condair Delta SPA Control Box is stopped. After eliminating the fault, the Condair Delta SPA Control Box must be switched off and on again.	
			The temperature and humidity values are in an inadmissible range.	Make sure that the cabin temperature and cabin humidity setpoints are set correctly.

Warning	Fault	Message	Possible causes	Remedy
W180	**—**	**Critical Setpoint**	The set setpoint value is above the critical limit. Note: The Condair Delta SPA Control Box or the Condair Omega, respectively continue to work normally. However, if the critical value is exceeded during the bathing operation, the heating switches off automatically.	
			The set setpoint value is outside the admissible range	Make sure that the setpoint value is within the valid range.
—	**E181**	**Demand/Hum. Input**	The demand signal or the sensor signal at the signal input is outside the valid range. Note: The operation of the Condair Delta SPA Control Box or Condair Omega is stopped. After eliminating the fault, the Condair Delta SPA Control Box or the Condair Omega must be switched off and on again (depending on which device the fault has occurred.	
			The measured value at the signal input is outside the valid range.	Check the signal input.
W182	**—**	**Critical Oven Temp.**	The measured sauna heater temperature has exceeded the critical temperature limit. Note: The Condair Delta SPA Control Box or the Condair Omega automatically interrupt all heating systems (steam, bench heating, sauna heater, etc.) until the sauna heater temperature is again within the permissible range.	
			The sauna heater temperature has exceeded the critical temperature limit.	Make sure that the setpoint or critical temperature is set correctly.
W183	**—**	**Door Open**	The cabin door is open. Note: No new bathing session can be started as long as the door is open.	
			The cabin door is open.	Close the cabin door.
—	**E200**	**File System**	Initialization of the Flash file system failed. Note: The Condair Delta SPA Control Box or the Condair Omega continues to work normally. After eliminating the fault, the Condair Delta SPA Control Box or the Condair Omega must be switched off and on again to reset the fault (depending on which device the fault occurred).	
			A problem occurred during initialization of the flash file system.	Contact your Condair representative.
—	**E201**	**Ethernet**	Initialization of Ethernet adapter failed. Note: The Condair Delta SPA Control Box or the Condair Omega continues to work normally. After eliminating the fault, the Condair Delta SPA Control Box or the Condair Omega must be switched off and on again to reset the fault (depending on which device the fault occurred).	
			A problem occurred during initialization of the Ethernet adapter.	Contact your Condair representative.
—	**E202**	**CANopen**	Initialization of the CANopen adapter failed. Note: The Condair Delta SPA Control Box or the Condair Omega continues to work normally. After eliminating the fault, the Condair Delta SPA Control Box or the Condair Omega must be switched off and on again to reset the fault (depending on which device the fault occurred).	
			A problem occurred during initialization of the CANopen adapter.	Contact your Condair representative.

Warning	Fault	Message	Possible causes	Remedy
W204	**—**	**CANopen Heartbeat**	The clock signal of one or more components connected to the CAN BUS is missing. Note: The Condair Delta SPA Control Box or the Condair Omega, respectively continue to work normally.	
			One or more components on the CAN BUS do not work.	Let have the CAN BUS wiring between components be checked by an electrician. Also check if all devices on the CAN bus are switched on.
			Warning appears after a software update.	The warning should disappear after a few seconds. Ignore this warning, it disappears after a few seconds.
W205	**—**	**Node incompatible**	Unsupported component(s) connected to the CAN BUS. Note: The Condair Delta SPA Control Box or the Condair Omega, respectively continue to work normally.	
			Software of one or more components is not up to date.	Check that all components on the CAN BUS are updated with the latest software.
W206	**—**	**Update in Progress**	A firmware update is running. Note: It is possible that the Condair Delta SPA Control Box or the Condair Omega may not work properly during the update. In addition, it is possible that the SPA display truns white during update. In this case, leave the device switched on and wait (max. 5 minutes) until everything is working properly again.	
			A firmware update is in progress.	Wait until the firmware of all components of the CAN BUS is updated. The warning is automatically reset after the update is completed.
W207	**—**	**Update Failed**	The firmware update failed. Note: The Condair Delta SPA Control Box or the Condair Omega, respectively continue to work normally.	
			The firmware update failed.	Make sure that the correct firmware is used and restart the update.
—	**E208**	**Slave Master Missing**	A device (slave or master) on the CAN BUS can not be found. Note: The operation of the Condair Delta SPA Control Box or Condair Omega is stopped. Once the slave or master is found, the system continues to run normally.	
			A CAN BUS participant (slave or master) is missing.	Make sure that all CAN BUS users are available and correctly connected. Also check if all devices on the CAN BUS are switched on.
—	**E209**	**OTP Hardware**	The OTP hardware code is invalid. Note: The operation of the Condair Delta SPA Control Box or Condair Omega is stopped. After eliminating the fault, the Condair Delta SPA Control Box or the Condair Omega must be switched off and on again (depending on which device the error has occurred).	
			The hardware version which is stored in the OTP is invalid.	Replace the control board in the Condair Delta SPA Control Box or in the Condair Omega.

Warning	Fault	Message	Possible causes	Remedy
W250	—	**Export File**	The configuration file was not saved. Note: The Condair Delta SPA Control Box or the Condair Omega, respectively continue to work normally.	
			The configuration file ("SpaExportSettings.json") could not be created on the local file system.	Make sure the local file system is working properly.
W251	—	**Export Incomplete**	Not all data records of the configuration file were saved. Note: The Condair Delta SPA Control Box or the Condair Omega, respectively continue to work normally.	
			Not all configuration settings could be stored in the configuration file ("SpaExportSettings.json") on the internal file system.	Make sure that the saving process has not been interrupted or that no components have been removed from the CAN BUS.
W252	—	**Import File**	Downloading of the configuration file failed. Note: The Condair Delta SPA Control Box or the Condair Omega, respectively continue to work normally.	
			The configuration file ("SpaExportSettings.json") could not be found or opened on the local file system.	Make sure the configuration file ("SpaExportSettings.json") is present and has been saved correctly.
W253	—	**Import Incompatible**	The configuration file to be downloaded is incompatible. Note: The Condair Delta SPA Control Box or the Condair Omega, respectively continue to work normally.	
			Some parameters in the configuration file ("SpaExportSettings.json") are not supported.	Make sure that all components of the CAN BUS are updated with the latest software version and that the configuration file has not been manipulated.
W254	—	**Import Incomplete**	Not all data from the configuration file could be loaded. Note: The Condair Delta SPA Control Box or the Condair Omega, respectively continue to work normally.	
			The configuration file ("SpaExportSettings.json") to be downloaded has been exported with an older firmware version.	A file export with the latest firmware has to be done again.
			A component has been removed from the CAN BUS after an export has been performed.	Check that all components are connected correctly to the CAN BUS.

8.4 Resetting the fault indication

To reset the fault indication (red LED light on the Condair Omega, warning triangle on the SPA display lights up red):

1. Switch off the Condair Omega via the unit switch on the front side of the unit.
2. Wait approx. 5 seconds, then switch on the Condair Omega again.

Notes:

– If the Condair Omega is controlled by a Condair Delta SPA Control Box, the SPA Control Box must always be switched off and on again after the Condair Omega has been restarted.

– If the fault has not been eliminated, the fault indication reappears after a short while.

8.5 Replacing the fuses and backup battery in the control unit

The fuses and the backup battery on the control board must be replaced by **authorized personnel only** (e.g. electrician).

Replace the fuses on the control board only with fuses matching the specifications below with the appropriate nominal current capacity. Never use refurbished fuses. Do not bridge the fuse holder.

To replace the fuse or the backup battery proceed as follows:

1. Disconnect the Condair Omega from the mains by switching off the electrical isolator(s) in the mains supply line(s) and secure electrical isolator(s) in "Off" position against inadvertent switching on.
2. Undo the retaining screw of the unit cover, then remove the unit cover.
3. From the left side release the locking lug of the swivel plate with the unit switch using a screw driver. Then, push swivel plate upwards until in comes to a stop and remove it from the openings in the housing. Turn swivel plate 90°outwards and hang it into the corresponding openings in the housing.
4. Replace the fuses or the backup battery.

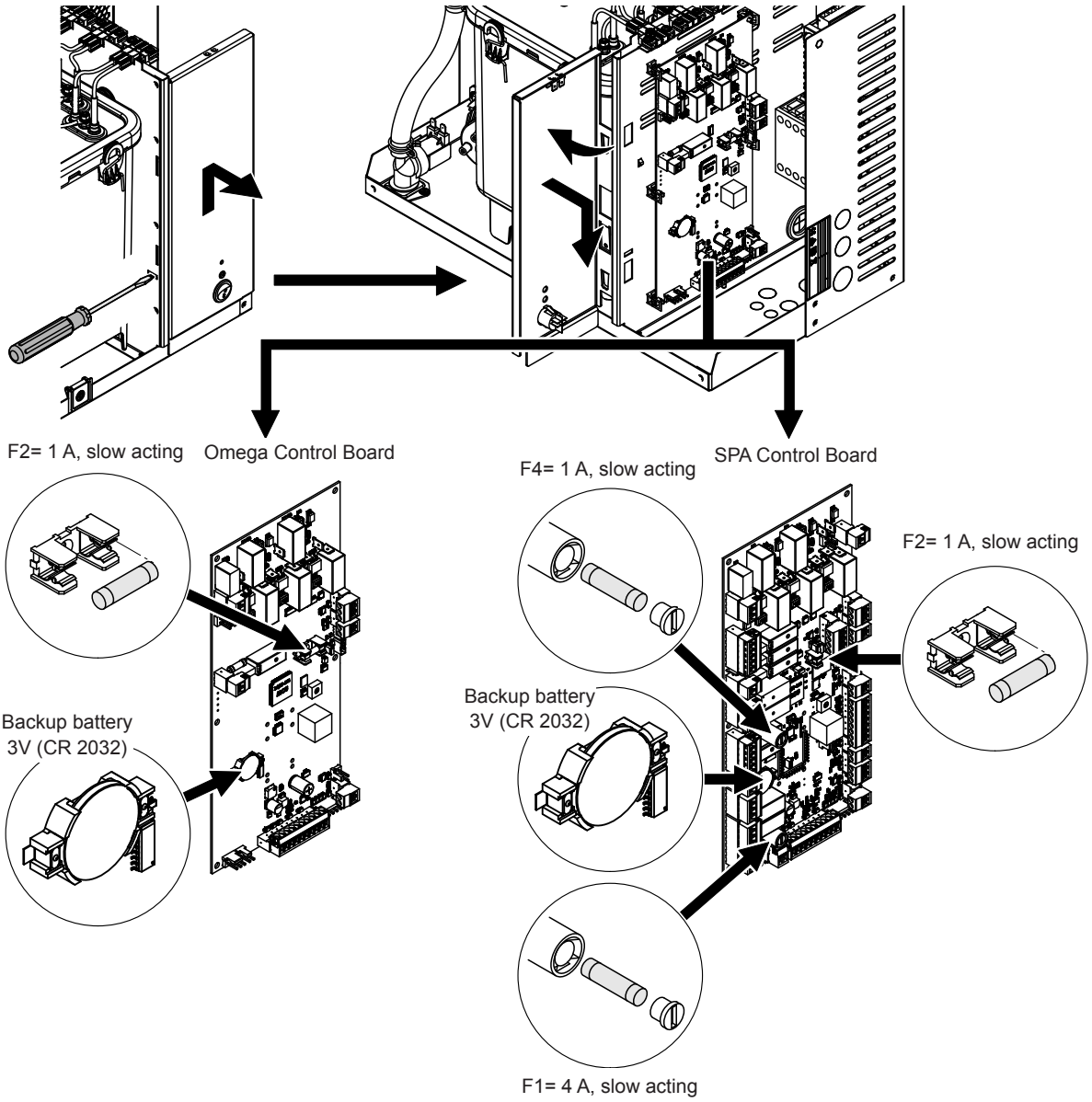

Fig. 24: Position of the backup battery and the fuses on the control board

5. Push the swivel plate with the unit switch upwards until in comes to a stop and remove it from the openings in the housing. Turn swivel plate 90° inwards and hang it into the corresponding openings in the housing, then push swivel plate downwards until the locking lug engages.
6. Relocate unit cover and lock it with the retaining screw.
7. Reconnect Condair Omega to the mains by switching on the electrical isolator(s) in the mains supply line(s).

9 Taking out of service/Disposal

9.1 Taking out of service

If the Condair Omega must be replaced or if the Condair Omega is not needed any more, proceed as follows:

1. Take the Condair Omega out of operation as described in *chapter 4.6*.
2. Have the Condair Omega (and if applicable other system components) unmounted by a qualified service technician.

9.2 Disposal/Recycling

Exhausted filter cartridges can be disposed of in accordance with local waste disposal regulations with domestic waste.

All other components of the Condair Omega must be disposed of in accordance with local regulations at the authorised collecting point.

If you have any questions, please contact the responsible authority or your local Condair representative.

Thank you for your contribution to environmental protection.

10 Product specification

10.1 Performance data / Fuses "F5" voltage supply

	Condair Omega	230V/1~/50...60 Hz					400V/3~/50...60 Hz				
		Max. capacity in kg/h	P_N max. in kW	I_N max. in A	Cable cross section AL min. in mm²	Fuses "**F5**" in A, quick acting (gR)	Max. steam capacity in kg/h	PN max. in kW	IN max. in A	Cable cross section AL min. in mm²	Fuses "**F5**" in A, quick acting (gR)
S	**2**	2.0	2.0	8.7	1.5	10	—	—	—	—	—
	4	4.0	3.5	15.3	2.5	16	—	—	—	—	—
	6	6.0	5.0	21.8	6.0	25	6.0	5.0	12.0	2.5	16
	8	8.0	6.5	28.3	6.0	32	8.0	6.5	15.3	2.5	16
	8	8.0	6.5	28.3	6.0	32	—	—	—	—	—
M	**12**	—	—	—	—	—	12.0	9.5	15.3	2.5	16
	16	—	—	—	—	—	16.0	12.5	26.1	6.0	32
	20	—	—	—	—	—	20.0	15.5	26.1	6.0	32

Note: The values marked in gray only apply to the Condair Omega 8 with SPA control for dual cabin applications (fin sauna/steam bath) for small cabins. In this variant, the heating elements for steam generation are supplied with 230V/1~/50...60 Hz.

10.2 Operating data

	Condair Omega						
	2	**4**	**6**	**8**	**12**	**16**	**20**
Supply voltage	230 V/1~/50...60 Hz				---		
	---		400 V/3~/50...60 Hz				
Number of heating elements	1	2	2	2	3	4	5
Max. steam capacity	2 kg/h	4 kg/h	6 kg/h	8 kg/h	12 kg/h	16 kg/h	20 kg/h
Power heating elements	1.5 kW	1.5 kW	2.25 kW	3.0 kW	3.0 kW	3.0 kW	3.0 kW
Admissible control signals	0-5 V, 1-5 V, 0-10 V, 2-10 V, 0-20 V, 0-16 V, 3-16 V, 0-20 mA, 4-20 mA, On/Off, 0-4 V						
Admissible temperature sensors	PT100, PT1000, KTY						
Admissible ambient temperature	1...40 °C						
Admissible ambient humidity	1...75 %rh (non-condensing)						
Admissible water supply temperature	1...40 °C						
Admissible water supply pressure	1…10 bar						
Water drain temperature	max 90 °C						
Protection class	IP20						

10.3 Connections/Dimensions/Weights

	Condair Omega						
	2	**4**	**6**	**8**	**12**	**16**	**20**
Water supply connector	G 3/4" external thread						
Water drain connector	bottom drain: ø30 mm side drain (option): ø40 mm						
Steam outlet connector	ø29 mm				ø45 mm		
Unit dimensions (HxBxT)	470 x 350 x 150				470 x 350 x 270		
Net weight	10.6 kg				14.4 Kg		
Operating weight	12.9 kg				19.6 kg		

10.4 Certificates

Certificates	CE, DVGW

11 Appendix

11.1 Program descriptions SPA applications

11.1.1 Steam shower application

The steam shower application is the simplest SPA application and consists only of a bathing phase. No accessories can be controlled with the steam shower application. The climate in the cabin can either be regulated to a certain temperature (up to 50 °C) or the steam is constantly fed into the cabin. The relative humidity is 100 %. The heat is generated exclusively by the hot steam.

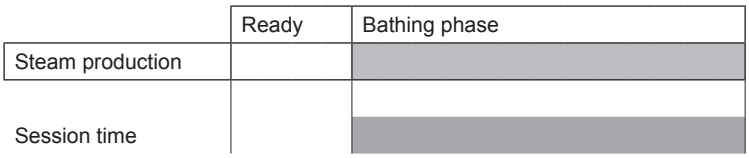

11.1.2 Steam bath application

In the steam bath application, the relative humidity in the cabin is 100 %, whereby the cabin temperature can be regulated up to 50 °C. The heat is generated by the hot steam and an optional bench heating.

The operation of the steam bath application can be divided into several phases:

- Ready — The system is ready for operation and can be started.
- Warm-up phase: — In the warm-up phase, the system is brought to operating temperature.
- Bathing phase: — During the bathing phase, the cabin temperature is regulated to the set temperature setpoint.
- Drying phase: — After the bathing phase, a drying phase follows to dry the cabin.

Optionally, it can be determined whether the system switches to a keep warm state after the bathing phase, in which the cabin temperature is regulated to a set temperature value. Thus, the warm-up phase can be reduced for the next bathing operation. Light and additional relays can be freely configured in which phase they should be active. Below is a possible configuration shown.

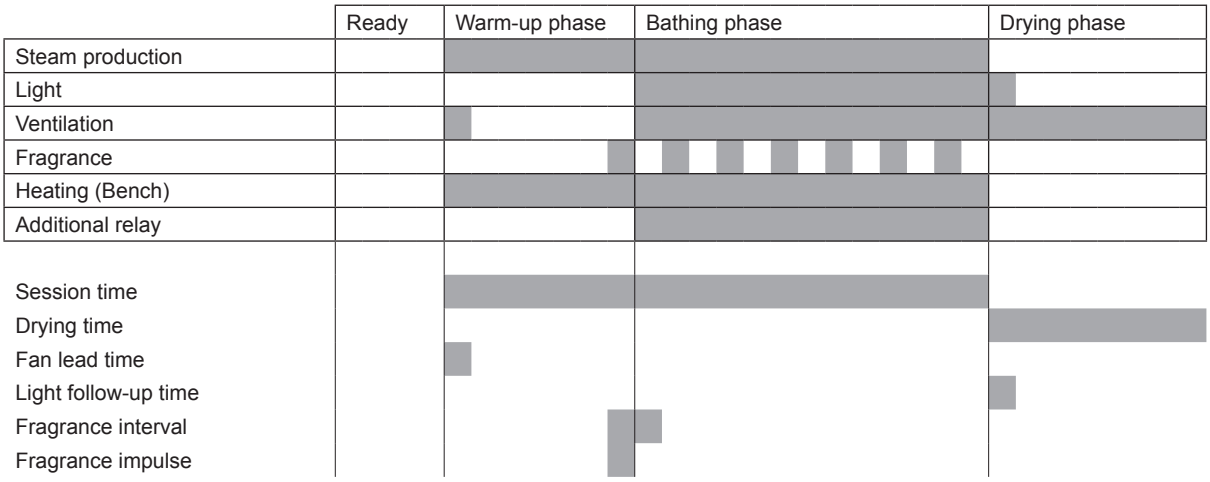

11.1.3 Caldarium application

In the Caldarium application, the relative humidity in the cabin is around 80%, which is generated by the steam of a steam generator. The heat is mainly generated by the seat and wall heating.

The operation of the Caldarium application can be divided into several phases:

- Ready — The system is ready for operation and can be started.
- Warm-up phase: — In the warm-up phase, the cabin is brought to operating humidity (steam) and bank and wall heating are brought to operating temperature.
- Bathing phase: — During the bathing phase, the cabin humidity is adjusted to the set humidity setpoint and the bench and wall heating are adjusted to the set temperature setpoints.
- Drying phase: — After the bathing phase, a drying phase follows to dry the cabin.

Optionally, it can be determined whether the system switches to a keep warm state after the bathing phase, in which the cabin humidity as well as the bench and wall temperature are regulated to a set keep warm value. Thus, the warm-up phase can be reduced for the next bathing operation. Light and additional relays can be freely configured in which phase they should be active. Below is a possible configuration shown.

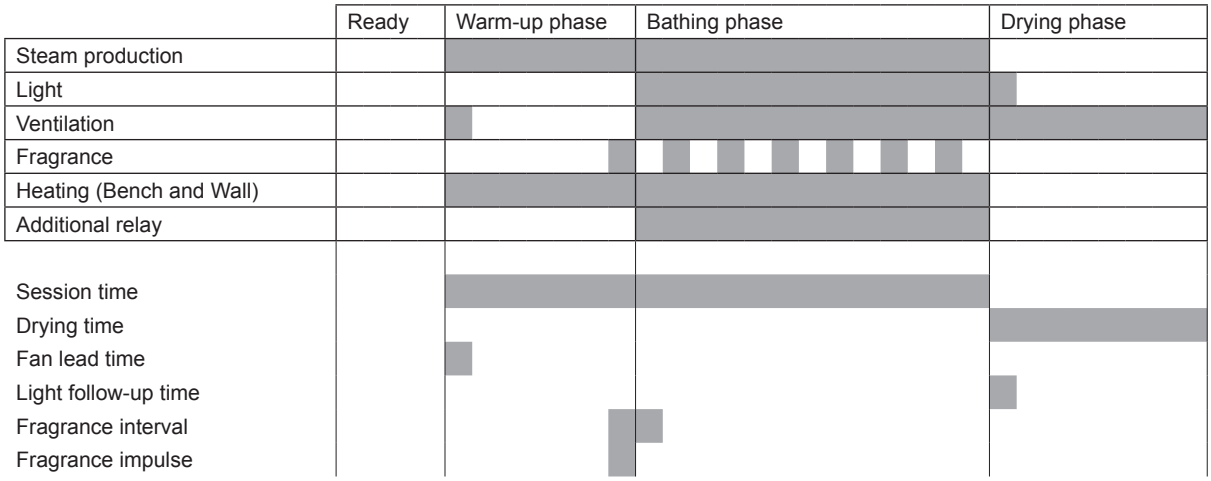

11.1.4 Rasul application

The Rasul application is a bathing ritual originating from the ancient Arab world. In a first step, clay is applied to the skin and waited until the mass on the skin has dried out (treatment phase). Then, bathing phase follows in which the clay mass is softened by water vapor. Finally, the clay is washed off with a shower (shower phase).
In the Rasul application, the relative humidity in the cabin is around 80%, which is generated by the steam of a steam generator. The heat is mainly generated by the seat and wall heating.

The operation of the Rasul application can be divided into several phases:

- Ready — The system is ready for operation and can be started.
- Pretreatment phase: — In the pretreatment phase, the bench and wall heating are brought to operating temperature. Optionally, a certain humidity can also be set in this phase.
- Treatment phase: — During the treatment phase, the bench and wall temperature are regulated to the set temperature setpoint. Optionally, a certain humidity can also be set in this phase.
- Warm-up phase: — In the warm-up phase, the cabin is brought to operating humidity (steam) and bank and wall heating are brought to operating temperature.
- Bathing phase: — During the bathing phase, the cabin humidity is adjusted to the set humidity setpoint and the bench and wall heating are adjusted to the set temperature setpoints.
- Drying phase: — After the bathing phase, a drying phase follows to dry the cabin.

Optionally, it can be determined whether the system switches to a keep warm state after the bathing phase, in which the cabin humidity as well as the bench and wall temperature are regulated to a set keep warm value. Thus, the warm-up phase can be reduced for the next bathing operation. Light and additional relays can be freely configured in which phase they should be active. Below is a possible configuration shown

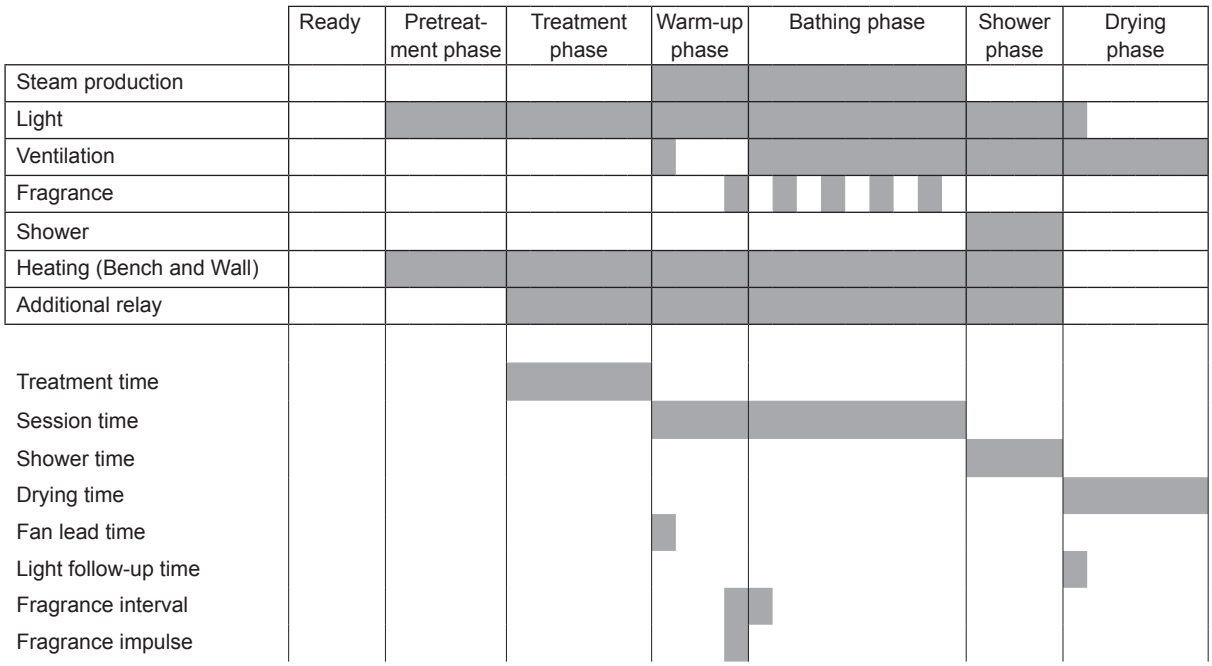

11.1.5 Fin sauna application

In the Fin sauna application, the cabin is equipped with a sauna heater only. The cabin temperature can be regulated up to 110 °C, whereby the relative humidity is around 10%.

The operation of the Fin sauna application can be divided into several phases:

- Ready — The system is ready for operation and can be started.
- Warm-up phase: — In the warm-up phase, the system is brought to operating temperature.
- Bathing phase: — During the bathing phase (sweating phase), the cabin temperature is regulated to the set target temperature.
- Drying phase: — After the bathing phase, a drying phase follows to dry the cabin.

Optionally, it can be determined whether the system switches to a keep warm state after the bathing phase, in which the cabin temperature is regulated to a set keep warm temperature value. Thus, the warm-up phase can be reduced for the next bathing operation. Light and additional relays can be freely configured in which phase they should be active. Below is a possible configuration shown.

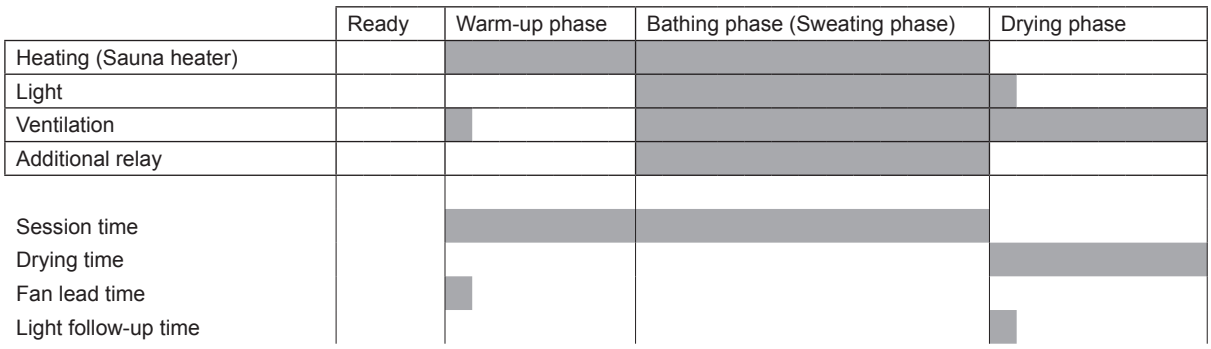

11.1.6 Bio sauna application

In the Bio sauna application the cabin climate is regulated to temperature and humidity. The temperature is between 50 °C - 110 °C and the relative humidity can be set between 40 - 80%. The heat is generated by a sauna heater. The humidity can be generated by a water reservoir integrated in the sauna heater or by a steam generator.

The operation of the Bio sauna application can be divided into several phases:

- Ready — The system is ready for operation and can be started.
- Warm-up phase: — In the warm-up phase, the system is brought to operating temperature (sauna heater) and operating humidity (steam).
- Bathing phase: — During the bathing phase), the cabin temperature and cabin humidity are regulated to the set setpoint values.
- Drying phase: — After the bathing phase, a drying phase follows to dry the cabin. The sauna heater remains switched on and maintains the temperature setpoint from the last bathing phase. This allows for gentle drying of the cabin and prevents condensation.

Optionally, it can be determined whether the system switches to a keep warm state after the bathing phase, in which the cabin temperature and cabin humidity are regulated to set keep warm values. Thus, the warm-up phase can be reduced for the next bathing operation. Light and additional relays can be freely configured in which phase they should be active. Below is a possible configuration shown.

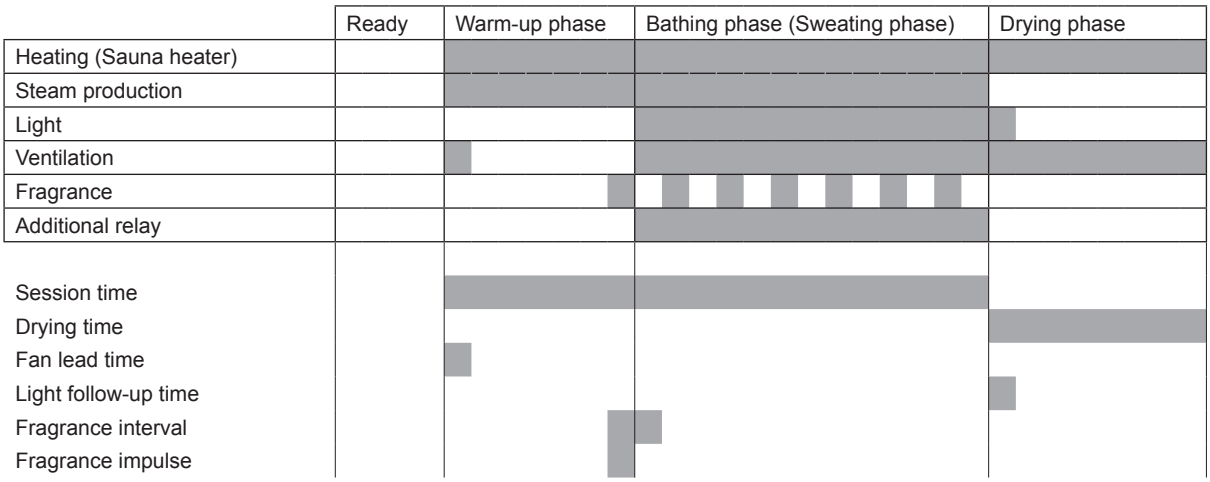

Notes

Notes

CONSULTING, SALES AND SERVICE:

CH94/0002.01

Condair Group AG
Gwattstrasse 17, 8808 Pfäffikon SZ, Switzerland
Phone +41 55 416 61 11, Fax +41 55 588 00 07
info@condair.com, www.condairgroup.com